VLAN

VLAN (. *Virtual Local Area Network*) — («») , , . VLAN Ethernet- 802.1q. , VLAN Ethernet- VLAN-ID Ethernet-.

1	VLAN.	**esr(config)# vlan <VID>**	<VID> – VLAN, [2..4094]. vlan ( ), vlan ( ) .
2	vlan ( ).	**esr(config-vlan)# name <vlan-name>**	<vlan-name> – 255 .
3	, Ethernet- VLAN ( ).	**esr(config-vlan)# force-up**	
4	Ethernet- VLAN' (VLAN-ID – 1) ( ).	**esr(config-if-gi)# switchport forbidden default-vlan**	
5	L2-.	**esr(config-if-gi)# mode switchport**	
6	.	**esr(config-if-gi)# mode hybrid**	ESR-1000/1200/1500/1511 /1700
7	L2-.	**esr(config-if-gi)# switchport access**	ESR-10/12V(F)/14VF/20/21/100/200 /3100. .

		esr(config-if-gi)# switchport trunk	ESR-10/12V(F)/14VF/20/21/100/200 /3100.
		esr(config-gi)# switchport general	ESR-1000/1200/1500/1511 /1700. .
8	VLAN .	**esr(config-if-gi)# switchport trunk allowed vlan add <VID>**	ESR-10/12V(F)/14VF/20/21/100/200/3100. <VID> – VLAN, [2..4094]. vlan ( ) vlan ( ).
		esr(config-if-gi)# switchport general allowed vlan add <VID> tagged	ESR-1000/1200/1500/1511 /1700. <VID> – VLAN, [2..4094]. vlan ( ) vlan ( ).
9	VLAN ( ).	**esr(config-if-gi)# switchport trunk native-vlan <VID>**	ESR-10/12V(F)/14VF/20/21/100/200/3100. <VID> – VLAN, [2..4094].
		esr(config-if-gi)# switchport general allowed vlan add <VID> untagged	ESR-1000/1200/1500/1511 /1700. <VID> – VLAN, [2..4094].
10	Ethernet- VLAN ( ).	**esr(config-if-gi)# switchport trunk allowed vlan auto-all**	ESR-10/12V(F)/14VF/20/21/100/200 /3100.
		esr(config-if-gi)# switchport general allowed vlan auto-all	ESR-1000/1200/1500/1511 /1700.

1. VLAN

:

VLAN 2 gi1/0/1.

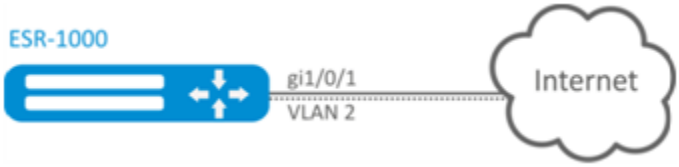

:

VLAN 2 gi1/0/1:

```
esr(config)# interface gi 1/0/1
esr(config-if-gi)# switchport general allowed vlan remove 2 untagged
esr(config-if-gi)# no switchport general pvid
```

2. VLAN

:

gi1/0/1 gi1/0/2 VLAN 2, VLAN 64, VLAN 2000.

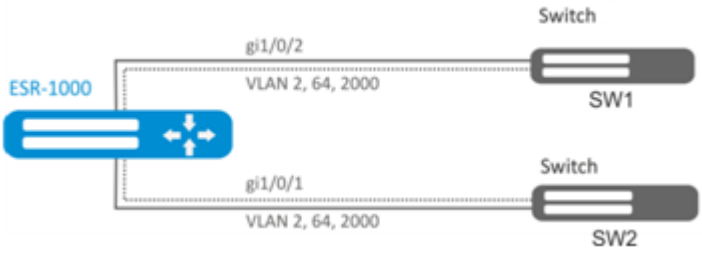

:

VLAN 2, VLAN 64, VLAN 2000 ESR-1000:

```
esr-1000(config)# vlan 2,64,2000
```

VLAN 2, VLAN 64, VLAN 2000 gi1/0/1-2:

```
esr-1000(config)# interface gi1/0/1
esr-1000(config-if-gi)# mode switchport
esr-1000(config-if-gi)# switchport forbidden default-vlan
esr-1000(config-if-gi)# switchport general allowed vlan add 2,64,2000 tagged
```

3. VLAN

:

gi1/0/1 VLAN 2, VLAN 64, VLAN 2000 trunk, gi1/0/2 access VLAN 2 ESR-100/ESR-200.

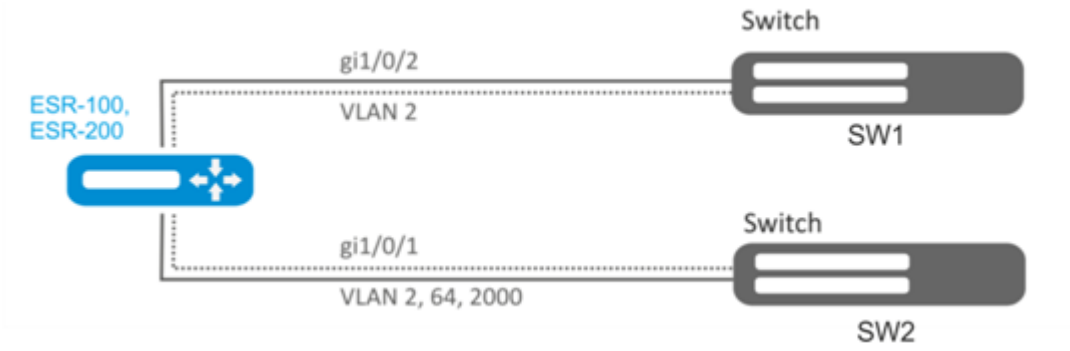

:

VLAN 2, VLAN 64, VLAN 2000 ESR-100/ESR-200:

```
esr(config)# vlan 2,64,2000
```

VLAN 2, VLAN 64, VLAN 2000 gi1/0/1:

```
esr(config)# interface gi1/0/1
esr(config-if-gi)# mode switchport
esr(config-if-gi)# switchport forbidden default-vlan
esr(config-if-gi)# switchport mode trunk
esr(config-if-gi)# switchport trunk allowed vlan add 2,64,2000
```

VLAN 2 gi1/0/2:

```
esr(config)# interface gi1/0/2
esr(config-if-gi)# mode switchport
esr(config-if-gi)# switchport access vlan 2
```

LLDP

Link Layer Discovery Protocol (LLDP) — , , , , .

1	LLDP .	**esr(config)# lldp enable**	
2	LLDPDU .	**esr(config-if-gi)# lldp receive**	

3	LLDPDU .	**esr(config-if-gi)# lldp transmit**	
8	LLDPDU ( ).	**esr(config)# lldp timer <SEC>**	<SEC> – , [1..32768]. : 30
4	, , LLDP ( ).	**esr(config)# lldp hold-multiplier <SEC>**	<SEC> – , [1..10]. : 4
5	IP-, LLDP TLV management-address ( ).	**esr(config)# lldp management-address <ADDR>**	<ADDR> – IP-, AAA.BBB.CCC.DDD, [0..255].
6	system-description, LLDP TLV system-description ( ).	**esr(config)# lldp system-description <DESCRIPTION>**	<DESCRIPION> – , 255 . .
7	system-name, LLDP TLV system-name ( ).	**esr(config)# lldp system-name <NAME>**	<NAME> – , 255 . hostname

:

LLDPDU ESR-1 ESR-2.

:

1. R1
   LLDP :

```
esr(config)# lldp enable
```

   LLDPDU gi 1/0/1.

```
esr(config)# interface gigabitethernet 1/0/1
esr(config-if-gi)# lldp receive
esr(config-if-gi)# lldp transmit
```

2. R2

   LLDP :

```
esr(config)# lldp enable
```

   LLDPDU gi 1/0/1.

```
esr(config)# interface gigabitethernet 1/0/1
esr(config-if-gi)# lldp receive
esr(config-if-gi)# lldp transmit
```

   LLDP :

```
esr# show lldp neighbors
```

   :

```
esr# show lldp neighbors gigabitethernet 1/0/1
```

LLDP :

```
esr# show lldp statistics
```

LLDP MED

LLDP MED — LLDP, : VLAN ID, DSCP, priority.

1	LLDP	**esr(config)# lldp enable**	
2	LLDPDU .	**esr(config-if-gi)# lldp transmit**	
3	MED LLDP	**esr(config)# lldp med fast-start enable**	
4	.	**esr(config)# network-policy <NAME>**	<NAME> – network-policy, 31 .
5	.	**esr(config-net-policy)# application <APP_TYPE>**	<APP-TYPE> – , network-policy. : • voice; • voice-signaling; • guest-voice; • guest-voice-signaling; • softphone-voice; • video-conferencing; • streaming-video; • video-signaling.
6	DSCP ( ).	**esr(config-net-policy)# dscp <DSCP>**	<DSCP> – DSCP, [0..63].
7	COS ( ).	**esr(config-net-policy)# priority <PRIORITY>**	<COS> – , : • best-effort – COS0; • background – COS1; • excellent-effort – COS2; • critical-applications – COS3; • video – COS4; • voice – COS5; • internetwork-control – COS6; • network-control – COS7.
8	VLAN ID.	**esr(config-net-policy)# vlan <VID> [tagged]**	<VID> – VLAN, [1…4094]; • **tagged** – , Ethernet- .
9	.	**esr(config-if-gi)# lldp network-policy <NAME>**	<NAME> – network-policy, 31 .

Voice VLAN

Voice VLAN — VLAN ID, IP- trunk VLAN ID VoIP-. VLAN ID MED LLDP.

:

VLAN, vid 10 vid 20 , Voice VLAN gi 1/0/1 ESR. IP- Voice VLAN.

:

VLAN 10 20 gi 1/0/1 trunk:

```
esr(config)# vlan 10,20
esr(config-vlan)# exit
esr(config)# interface gigabitethernet 1/0/1
esr(config-if-gi)# mode switchport
esr(config-if-gi)# switchport mode trunk
esr(config-if-gi)# switchport trunk allowed vlan add 10,20
esr(config-if-gi)# exit
```

LLDP MED LLDP :

```
esr(config)# lldp enable
esr(config)# lldp med fast-start enable
```

, voice VLAN ID 20:

```
esr(config)# network-policy VOICE_VLAN
esr(config-net-policy)# application voice
esr(config-net-policy)# vlan 20 tagged
esr(config-net-policy)# exit
```

LLDP :

```
esr(config)# interface gigabitethernet 1/0/1
esr(config-if-gi)# lldp transmit
esr(config-if-gi)# lldp receive
esr(config-if-gi)# lldp network-policy VOICE_VLAN
esr(config-if-gi)# exit
```

-

Ethernet- VLAN - VLAN, . - VLAN, / , Ethernet- - .. - . - (VLAN-ID) , .. OSI.

1	- (routeport hybrid).	**esr(config)# interface gigabitethernet <PORT>.<S-VLAN>** **interface tengigabitethernet <PORT>.<S-VLAN>** **interface port-channel <CH>.<S-VLAN>**	<PORT> – . <CH> – . <S-VLAN> – S-VLAN. bridge-group, - .
2	- ( ).	**esr(config-subif)# description <DESCRIPTION>**	<DESCRIPTION> – , 255 .
3	VRF, - ( ).	**esr(config-subif)# ip vrf forwarding <VRF>**	<VRF> – VRF, 31 .
4	IPv4/IPv6- IP- .	**esr(config-subif)# ip address <ADDR /LEN>**	<ADDR/LEN> – IP- , AAA.BBB.CCC.DDD/EE, AAA – DDD [0..255] EE [1..32]. IPv4- . IP-.
		esr(config-subif)# ipv6 address <IPV6-ADDR/LEN>	<IPV6-ADDR/LEN> – IP- , X:X:X:X::X/EE, X [0.. FFFF] EE [1..128]. IPv6- . IPv6-. UIPv4/IPv6- . 8 IPv4/IPv6- .
		esr(config-subif)# ip address dhcp	DHCP- . DHCP-.
5	Firewall (. Firewall).	**esr(config-subif)# ip firewall disable**	

		esr(config-subif)# security-zone <NAME>	<NAME> – , 31 .
6	, - ( ).	**esr(config-subif)# load-average <TIME>**	<TIME> – , [5..150].
7	IPv4/IPv6 ARP-, ( ).	**esr(config-subif)# ip arp reachable-time <TIME>** **esr(config-subif)# ipv6 nd reachable-time <TIME>**	<TIME> – MAC-, . 5000 100000000 . [0,5;1,5]*<TIME>.
8	MTU (MaximumTransmitionUnit). MTU 1500 "system jumbo-frames" ( ).	**esr(config-subif)# mtu <MTU>**	<MTU> – MTU . : 1500.
9	( ).	**esr(config-subif)# history statistics**	
10	MSS (Maximum segment size) TCP- ( ).	**esr(config-subif)# ip tcp adjust-mss <MSS>** **esr(config-subif)# ipv6 tcp adjust-mss <MSS>**	<MSS> – MSS, [500..1460]. : 1460

- :

- QoS (. QoS);
- proxy (. HTTP/HTTPS-);
- (. Netflow sFlow);
- (.);
- VRRF (.);
- BRAS (. BRAS (Broadband Remote Access Server));
- IDS/IPS (. IPS/IDS).

-

:

192.168.3.1/24 VLAN: 828 gigabitethernet 1/0/1.

:

- VLAN: 828

```
esr(config)# interface gigabitethernet 1/0/1.828
```

IP- :

```
esr(config)# interface gigabitethernet 1/0/1.828
esr(config-subif)# ip address 192.168.3.1/24
esr(config-subif)# exit
```

IP-, - firewall, .

Q-in-Q

Q-in-Q — 802.1q-. VLAN . (InnerTag) 802.1q- payload. C-VLAN (Customer VLAN). (OuterTag) — 802.1q-, 802.1q-, S-VLAN (Service VLAN). Ethernet 802.1ad.

1	- (routeport hybrid).	**esr(config)# interface gigabitethernet <PORT>.<S-VLAN>** **interface tengigabitethernet <PORT>.<S-VLAN>** **interface port-channel <CH>.<S-VLAN>**	<PORT> – . <CH> – . <S-VLAN> – S-VLAN. bridge-group, - .
2	Q-in-Q .	**esr(config)# interface gigabitethernet <PORT>.<S-VLAN>.<C-VLAN>** **esr(config)# interface tengigabitethernet <PORT>.<S-VLAN>.<C-VLAN>** **esr(config)# interface port-channel <CH>.<S-VLAN>.<C-VLAN>**	<PORT> – . <CH> – . <S-VLAN> – S-VLAN. <C-VLAN> – C-VLAN. - bridge-group, - .
3	Q-in-Q ( ).	**esr(config-qinq-if)# description <DESCRIPTION>**	<DESCRIPTION> – , 255 .
4	VRF, Q-in-Q ( ).	**esr(config-qinq-if) # ip vrf forwarding <VRF>**	<VRF> – VRF, 31 .
5	IPv4/IPv6- IP- .	**esr(config-qinq-if)# ip address <ADDR/LEN>**	<ADDR/LEN> – IP- , AAA.BBB.CCC.DDD/EE, AAA – DDD [0..255] EE [1..32]. IPv4- . IP-.
		esr(config-qinq-if)# ipv6 address <IPV6-ADDR/LEN>	<IPV6-ADDR/LEN> – IP- , X:X:X:X::X/EE, X [0..FFFF] EE [1..128]. IPv6- . IPv6-. UIPv4/IPv6- . 8 IPv4/IPv6- .
		esr(config-qinq-if)# ip address dhcp	DHCP- . DHCP-.
6	Firewall (. Firewall).	**esr(config-qinq-if)# ip firewall disable**	
		esr(config-qinq-if)# security-zone <NAME>	<NAME> – , 31 .
7	, - ( ).	**esr(config-subif)# load-average <TIME>**	<TIME> – , [5..150].
8	IPv4/IPv6 ARP-, ( ).	**esr(config-subif)# ip arp reachable-time <TIME>** **esr(config-subif)# ipv6 nd reachable-time <TIME>**	<TIME> – MAC-, . 5000 100000000 . [0,5;1,5]*<TIME>.
9	MTU (MaximumTransmitionUnit). MTU 1500 "system jumbo-frames" ( ).	**esr(config-subif)# mtu <MTU>**	<MTU> – MTU . : 1500.
10	( ).	**esr(config-subif)# history statistics**	
11	MSS (Maximum segment size) TCP- ( ).	**esr(config-subif)# ip tcp adjust-mss <MSS>** **esr(config-subif)# ipv6 tcp adjust-mss <MSS>**	<MSS> – MSS, [500..1460]. : 1460

qinq- :

- QoS (. QoS);
- proxy (. HTTP/HTTPS-);
- (. Netflow sFlow);
- (.);
- VRRF (.);
- BRAS (. BRAS (Broadband Remote Access Server));
- IDS/IPS (. IPS/IDS).

Q-in-Q

:

192.168.1.1/24 C-VLAN: 741, S-VLAN: 828 gigabitethernet 1/0/1.

:

- S-VLAN: 828

```
esr(config)# interface gigabitethernet 1/0/1.828
esr(config-subif)# exit
```

Q-in-Q- S-VLAN: 741 IP- .

```
esr(config)# interface gigabitethernet 1/0/1.828.741
esr(config-qinq-if)# ip address 192.168.1.1/24
esr(config-qinq-if)# exit
```

IP-, Q-in-Q - firewall, .

USB-

USB- . USB- USB-. 10- USB-.

USB-

1	USB- , .		
2	, USB-.	**esr# show cellulars status modem**	"USB port" .
3	USB- .	**esr(config)# cellular profile <ID>**	<ID> – USB- [1..10].
4	( ).	**esr(config-cellular-profile)# description <DESCRIPTION>**	<DESCRIPTION> – , 255 .
5		**esr(config-cellular-profile)# apn <NAME>**	<NAME> – , 31 .
6	(/).	**esr(config-cellular-profile)# user <NAME>**	<NAME> – , 31 .
7	(/).	**esr(config-user)# password ascii-text { <CLEAR-TEXT> | encrypted <ENCRYPTED-TEXT> }**	<CLEAR-TEXT> – , [1 .. 64] , [0-9a-fA-F]; <ENCRYPTED-TEXT> – , [2..128] .
8	(/).	**esr(config-user)# enable**	
9	.	**esr(config-cellular-profile)# number <WORD>**	<WORD> – , 15 .
10	( ).	**esr(config-cellular-profile)# allowed-auth <TYPE>**	<TYPE> – [none, PAP, CHAP, MSCHAP, MSCHAPv2, EAP]. : PAP
11	IP- .	**esr(config-cellular-profile)# ip-version { ipv4 | ipv6 }**	• **ipv4** – IPv4; • **ipv6** – IPv6;
12	USB- .	**esr(config)# cellular modem <ID>**	<ID> – USB- [1..10].
13	( ).	**esr(config-cellular-modem)# description <DESCRIPTION>**	<DESCRIPTION> – , 255 .
14	VRF, ( ).	**esr(config-cellular-modem)# ip vrf forwarding <VRF>**	<VRF> – VRF, 31 .
15	USB-, (2).	**esr(config-cellular-modem)# device <WORD>**	<WORD> – USB- [1..12].
16	USB-.	**esr(config-cellular-modem)# profile <ID>**	<ID> – USB- [1..10].
17	SIM- ( ).	**esr(config-cellular-modem)# pin <WORD>**	<WORD> – SIM- [4..8]. .
18	USB- ( ).	**esr(config-cellular-modem)# allowed-mode <MODE>**	<MODE> – USB- [2g, 3g, 4g]. : , .
19	( ).	**esr(config-cellular-modem)# mru { <MRU> }**	<MRU> – MRU, [128..16383]. : 1500.
20	MTU (MaximumTransmitionUnit). MTU 1500 "system jumbo-frames" ( ).	**esr(config-cellular-modem)# mtu <MTU>**	<MTU> – MTU . : 1500.

21	USB- ( ).	**esr(config-cellular-modem)# preferred-mode { <MODE> }**	<MODE> – USB- [2g, 3g, 4g]
22	Firewall (. Firewall).	**esr(config-subif)# ip firewall disable**	
		esr(config-subif)# security-zone <NAME>	<NAME>- , 31 .
23	USB-.	**esr(config-cellular-modem)# enable**	

:

- QoS (. QoS);
- proxy (. HTTP/HTTPS-);
- (. Netflow sFlow);
- (. Policy-based routing MultiWAN).

, **NAT.**

:

, USB-.

:

.

, . , USB-:

```
esr# show cellular status modem
Number
device        USB port        Manufacturer        Model        Current state        Interface        Link
state
1            1-2         huawei          E3372   Disabled        --          Down
```

USB-:

```
esr(config)# cellular profile 1
```

APN, , . APN :

```
esr(config-cellular-profile)# apn internet.mts.ru
```

, , :

```
esr(config-cellular-profile)# user mts
esr(config-ppp-user)# password ascii-text mts
esr(config-cellular-profile)# number *99#
esr(config-cellular-profile)# allowed-auth PAP
```

USB- , , :

```
esr(config)# cellular modem 1
esr(config-cellular-modem)# device 1-2
```

:

```
esr(config-cellular-modem)# profile 1
esr(config-cellular-modem)# enable
```

PPP E1

PPP (. *Point-to-Point Protocol*) — , . , .

PPP- E1, ToPGATE-SFP ESR.

1		**esr(config-if-gi)# mode switchport**	
2	e1	**esr(config-if-gi)# switchport mode e1**	
3		**esr(config-if-gi)# switchport e1 clock source <SOURCE>**	<SOURCE> – : • **Internal** ( ) – ; • **line** – .
4	MTU (Maximum Transmition Unit)	**esr(config-if-gi)# mtu <MTU>**	<MTU> – MTU, E1 Multilink [128..1500].
5	- ( )	**esr(config-if-gi)# switchport e1 crc <FCS>**	<FCS> – : • **16** ( ) – FCS16; • **32** – FCS32.
6	( )	**esr(config-if-gi)# switchport e1 framing <CRC>**	<CRC> – : • **crc-4** – CRC-4; • **no-crc4** ( ) – .
7	( )	**esr(config-if-gi)# switchport e1 invert data**	
8	( )	**esr(config-if-gi)# switchport e1 linecode <CODE>**	<CODE> – ; • **ami** – ; • **hdb3** ( ) – 3.
9		**esr(config-if-gi)# switchport e1 timeslots <RANGE>**	<RANGE> – -
10	1 , ( )	**esr(config-if-gi)# switchport e1 unframed**	
11	E1	**esr(config)# interface e1 1/<SLOT>/1**	<SLOT> – .
12	CHAP- PPP ( )	**esr(config-e1)# ppp authentication chap**	
13	, CHAP- ( )	**esr(config-e1)# ppp chap hostname <NAME>**	<NAME> –
14	( )	**esr(config-e1)# ppp chap password ascii-text <CLEAR-TEXT>**	<CLEAR-TEXT> – , [1 .. 64] , [0-9a-fA-F]
15	( )	**esr(config-e1)# ppp chap refuse**	
16	( )	**esr(config-e1)# ppp chap username <NAME>**	<NAME> –
17	IP- IP- ( )	**esr(config-e1)# ppp ipcp accept-address**	
18	IP-, ( )	**esr(config-e1)# ppp ipcp remote-address <ADDR>**	<ADDR> – IP-
19	Configure-Request , ( )	**esr(config-e1)# ppp max-configure <VALUE>**	<VALUE> –
20	Configure-NAK , ( )	**esr(config-e1)# ppp max-failure <VALUE>**	<VALUE> –
21	Terminate-Request , ( )	**esr(config-e1)# ppp max-terminate <VALUE>**	<VALUE> –
22	MRU (Maximum Receive Unit) ( )	**esr(config-e1)# ppp mru <MRU>**	<MRU> – MRU
23	MLPPP ( )	**esr(config-e1)# ppp multilink**	
24	MLPPP- ( )	**esr(config-e1)# ppp multilink-group <GROUP-ID>**	<GROUP-ID> –
25	, keepalive- ( )	**esr(config-e1)# ppp timeout keepalive <TIME>**	<TIME> –
26	, ( )	**esr(config-e1)# ppp timeout retry <TIME>**	<TIME> –

:

PPP- IP- 10.77.0.1/24 ToPGATE-SFP, 1-8 ; – .

:

, ToPGATE-SFP, gigabitethernet 1/0/3 1:

```
esr# configure
esr(config)# interface gigabitethernet 1/0/3
esr(config-if-gi)# description "*** ToPGATE ***"
esr(config-if-gi)# switchport mode e1
esr(config-if-gi)# switchport e1 timeslots 1-8
esr(config-if-gi)# switchport e1 clock source line
esr(config-if-gi)# switchport e1 slot 3
esr(config-if-gi)# exit
```

interface e1 1/3/1:

```
esr(config)# interface e1 1/3/1
esr(config-e1)# security-zone trusted
esr(config-e1)# ip address 10.77.0.1/24
esr(config-e1)# exit
```

:

```
esr# commit
Configuration has been successfully committed
esr# confirm
Configuration has been successfully confirmed
```

MLPPP

Multilink PPP (MLPPP) , , . .

1	.	**esr(config)# interface multilink <IF>**	<IF> – .
2	( ).	**esr(config-multilink)# description <DESCRIPTION>**	<DESCRIPTION> – , 255 .
3	, ( ).	**esr(config-multilink)# load-average <TIME>**	<TIME> – , [5..150]. : 5.
4	MTU (Maximum Transmition Unit) ( ). MTU 1500 "system jumbo-frames".	**esr(config-multilink)# mtu <MTU>**	<MTU> – MTU, [1280..1500]. : 1500.
5	CHAP-.	**esr(config-multilink)# ppp authentication chap**	
6	( ).	**esr(config-multilink)# ppp chap refuse**	

7	, CHAP-.	**esr(config-multilink)# ppp chap hostname <NAME>**	<NAME> – , 31
8	, CHAP-.	**esr(config-multilink)# ppp chap password ascii-text { <CLEAR-TEXT> | encrypted <ENCRYPTED-TEXT> }**	<CLEAR-TEXT> – , [8 .. 64] , [0-9a-fA-F]. <ENCRYPTED-TEXT> – , [16.. 128] .
9	IP- IP- ( ).	**esr(config-multilink)# ppp ipcp accept-address**	
10	IP-, .	**esr(config-multilink)# ppp iccp remote-address <ADDR>**	<ADDR> – IP- .
11	.	**esr(config-multilink)# chap username <NAME>**	<NAME> – , 31 .
12	.	**esr(config-ppp-user)# password ascii-text { <CLEAR-TEXT> | encrypted <ENCRYPTED-TEXT> }**	<CLEAR-TEXT> – , [8 .. 64] , [0-9a-fA-F]. <ENCRYPTED-TEXT> – , [16.. 128] .
13	Configure-Request , ( ).	**esr(config-multilink)# ppp max-configure <VALUE>**	<VALUE> – , [1..255]. : 10.
14	Configure-NAK , ( ).	**esr(config-multilink)# ppp max-failure <VALUE>**	<VALUE> – , [1..255].
15	Terminate-Request , ( ).	**esr(config-multilink)# ppp max-terminate <VALUE>**	<VALUE> – , [1..255]. : 2.
16	MRU (Maximum Receive Unit) .	**esr(config-multilink)# ppp mru <MRU>**	<MRU> – MRU, [128..1485]. : 1500.
17	, keepalive- ( ).	**esr(config-multilink)# ppp timeout keepalive <TIME>**	<TIME> – , [1..32767]. : 10.
18	, ( ).	**esr(config-multilink)# ppp timeout retry <TIME>**	<TIME> – , [1..255]. : 3.
19	MLPP-.	**esr(config-multilink)# mrru <MRRU>**	<MRRU> – MLPP-, [1500.. 10000].
20	e1 .	**esr(config-if-gi)# switchport e1 <SLOT>**	<SLOT> – , [0..3].
21	SFPe1-.	**esr(config-if-gi)# switchport mode e1**	
22	MLPPP E1-.	**esr(config-e1)# ppp multilink**	
23	E1- .	**esr(config-e1)# ppp multilink-group <GROUP-ID>**	<GROUP-ID> – , [1..4].

:

MLPPP- IP- 10.77.0.1/24 MXE.

:

gigabitethernet 1/0/10 1:

```
esr# configure
esr(config)# interface gigabitethernet 1/0/1
esr(config-if-gi)# switchport mode e1
esr(config-if-gi)# switchport e1 slot 0
esr(config-if-gi)# exit
esr(config)# interface gigabitethernet 1/0/2
esr(config-if-gi)# switchport mode e1
esr(config-if-gi)# switchport e1 slot 1
esr(config-if-gi)# exit
```

MLPPP 3:

```
esr(config)# interface multilink 3
esr(config-multilink)# ip address 10.77.0.2/24
esr(config-multilink)# security-zone trusted
esr(config-multilink)# exit
esr(config)# exit
```

interface e1 1/0/1, interface e1 1/0/2 MLPPP 3:

```
esr(config)# interface e1 1/0/1
esr(config-e1)# ppp multilink
esr(config-e1)# ppp multilink-group 3
esr(config-e1)# exit
esr(config)# interface e1 1/0/2
esr(config-1)# ppp multilink
esr(config-1)# ppp multilink-group 3
esr(config-1)# exit
```

Bridge

Bridge () — Ethernet , IP. Ethernet-, IP-. (2 OSI), .

1	(bridge) .	**esr(config)# bridge <BRIDGE-ID>**	<BRIDGE-ID> – , : • ESR-10/12V(F)/14VF – [1..50]; • ESR-20/21/100/200 – [1..250]; • ESR-1000/1200/1500 /1511/1700/3100 – [1..500].
2	.	**esr(config-bridge)# enable**	
3	VRF, ( ).	**esr(config-bridge)# ip vrf forwarding <VRF>**	<VRF> – VRF, 31 .
4	( ).	**esr(config-bridge)# description <DESCRIPTION>**	<DESCRIPTION> – , 255 .
5	-, qinq-, L2GRE L2TPv3 . / L2- ( ).	**esr(config-if-gi)# bridge-group <BRIDGE-ID>** **esr(config-if-l2tpv3)# bridge-group <BRIDGE-ID>**	<BRIDGE-ID> – , : • ESR-10/12V(F)/14VF – [1..50]; • ESR-20/21/100/200 – [1..250]; • ESR-1000/1200/1500 /1511/1700/3100 – [1..500].
6	VLAN. L2-, VLAN, L2- ( )	**esr(config-bridge)# vlan <VID>**	<VID> – VLAN, [1..4094].

7	MTU (Maximum Transmition Unit) , bridge (; , bridge VLAN). MTU 1500 "system jumbo-frames"	**esr(config-bridge)# mtu <MTU>**	<MTU> – MTU, : • ESR-10/12V(F)/14VF – [552..9600]; • ESR-20/21 – [552..9500]; • ESR-100/200/1000/1200/1500/1511/1700 – [552..10000] • ESR-1500/1511/1700 /3100 – [552..9190]. : 1500
8	IPv4/IPv6- IP- .	**esr(config-bridge)# ip address <ADDR /LEN>**	<ADDR/LEN> – IP- , AAA.BBB.CCC.DDD/EE, AAA – DDD [0..255] EE [1..32]. IPv4- . IP-.
		esr(config-bridge)# ipv6 address <IPV6-ADDR/LEN>	<IPV6-ADDR/LEN> – IP- , X:X:X:X::X/EE, X [0..FFFF] EE [1..128]. IPv6- . IPv6-. UIPv4/IPv6- . 8 IPv4/IPv6- .
		esr(config-bridge)# ip address dhcp	DHCP- . DHCP-.
9	Firewall (. Firewall).	**esr(config-bridge)# ip firewall disable**	
		esr(config-bridge)# security-zone <NAME>	<NAME>- , 31 .
9	( ).	**esr(config-bridge)# history statistics**	
8	, bridge ( )	**esr(config-bridge)# load-average <TIME>**	<TIME> – , [5..150]. : 5
9	MAC- , ( ).	**esr(config-bridge)# mac-address <ADDR>**	<ADDR> – - , XX:XX:XX:XX:XX:XX, [00..FF].
10	bridge- . . (; ESR-1000/1200/1500/1511/1700 /3100)	**esr(config-bridge)# protected-ports [exclude vlan]**	exclude vlan – , VLAN (bridge) .
11	unknown-unicast (MAC-) bridge. (; ESR-1000/1200/1500/1511/1700 /3100)	**esr(config-bridge)# unknown-unicast-forwarding disable**	
12	IPv4/IPv6- ARP-, bridge ( ).	**esr(config-bridge)# ip arp reachable-time <TIME>** **esr(config-bridge)# ipv6 nd reachable-time <TIME>**	<TIME> – MAC-, . 5000 100000000 . [0,5;1,5] *<TIME>.
bridge- : • QoS (. QoS); • proxy (. HTTP/HTTPS-); • (. Netflow sFlow); • (.); • VRRF (.); • BRAS (. BRAS (Broadband Remote Access Server)); • IDS/IPS (. IPS/IDS).			

bridge VLAN L2TPv3-

:

L2- , , L2TPv3-, . VLAN 333.

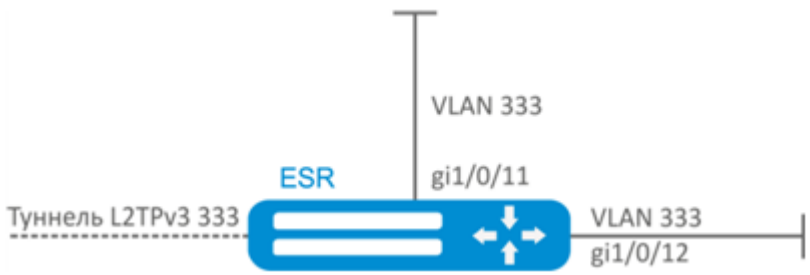

:

VLAN 333:

```
esr(config)# vlan 333
esr(config-vlan)# exit
```

«trusted»:

```
esr(config)# security-zone trusted
esr(config-zone)# exit
```

gi1/0/11, gi1/0/12 VLAN 333:

```
esr(config)# interface gigabitethernet 1/0/11-12
esr(config-if)# mode switchport
esr(config-if)# switchport general allowed vlan add 333 tagged
```

bridge 333, VLAN 333 «trusted»:

```
esr(config)# bridge 333
esr(config-bridge)# vlan 333
esr(config-bridge)# security-zone trusted
esr(config-bridge)# enable
```

L2TPv3- , (L2TPv3- L2TPv3-). VID .

```
esr(config)# tunnel l2tpv3 333
esr(config-l2tpv3)# bridge-group 333
```

bridge VLAN

:

VLAN 50 (10.0.50.0/24) VLAN 60 (10.0.60.0/24). VLAN 50 «LAN1», VLAN 60 – «LAN2», .

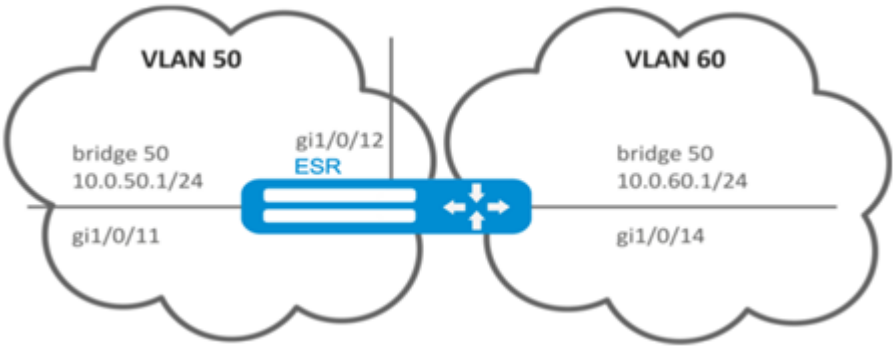

:

VLAN 50, 60:

```
esr(config)# vlan 50,60
esr(config-vlan)# exit
```

«LAN1» «LAN2»:

```
esr(config)# security-zone LAN1
esr(config-zone)# exit
esr(config)# security-zone LAN2
esr(config-zone)# exit
```

gi1/0/11, gi1/0/12 VLAN 50:

```
esr(config)# interface gigabitethernet 1/0/11-12
esr(config-if-gi)# switchport general allowed vlan add 50 tagged
```

gi1/0/14 VLAN 60:

```
esr(config)# interface gigabitethernet 1/0/14
esr(config-if-gi)# switchport general allowed vlan add 60 tagged
```

bridge 50, VLAN 50, IP- 10.0.50.1/24 «LAN1»:

```
esr(config)# bridge 50
esr(config-bridge)# vlan 50
esr(config-bridge)# ip address 10.0.50.1/24
esr(config-bridge)# security-zone LAN1
esr(config-bridge)# enable
```

bridge 60, VLAN 60, IP- 10.0.60.1/24 «LAN2»:

```
esr(config)# bridge 60
esr(config-bridge)# vlan 60
esr(config-bridge)# ip address 10.0.60.1/24
esr(config-bridge)# security-zone LAN2
esr(config-bridge)# enable
```

Firewall, :

```
esr(config)# security zone-pair LAN1 LAN2
esr(config-zone-pair)# rule 1
esr(config-zone-pair-rule)# action permit
esr(config-zone-pair-rule)# enable
esr(config-zone-pair-rule)# exit
esr(config-zone-pair)# exit
esr(config)# security zone-pair LAN2 LAN1
esr(config-zone-pair)# rule 1
esr(config-zone-pair-rule)# action permit
esr(config-zone-pair-rule)# enable
esr(config-zone-pair-rule)# exit
esr(config-zone-pair)# exit
esr(config)# exit
```

:

```
esr# show interfaces bridge
```

/ VLAN-

:

gigabitethernet 1/0/1 Ethernet- VLAN-. gigabitethernet 1/0/2, VLAN-ID 828. gigabitethernet 1/0/2 Ethernet- VLAN-ID 828, gigabitethernet 1/0/1.

:

bridge VLAN IP-.

```
esr(config)# bridge 1
esr(config-bridge)# enable
esr(config-bridge)# exit
```

gigabitethernet 1/0/1 bridge 1.

```
esr(config)# interface gigabitethernet 1/0/1
esr(config-if-gi)# bridge-group 1
esr(config-if-gi)# exit
```

- gigabitethernet 1/0/2.828 bridge 1.

```
esr(config)# interface gigabitethernet 1/0/2.828
esr(config-subif)# bridge-group 1
esr(config-subif)# exit
```

VLAN- Ethernet-, 4 . gigabitethernet 1/0/2 Q-in-Q MTU 4 .

Dual-Homing

ESR-1000.

Dual-Homing – , .

1	, .	**esr(config-if-gi)# backup interface<IF> vlan <VID>**	<IF> – , . <VID> – VLAN, [2…4094]. «-» «,».
2	MAC-, ( ).	**esr(config)# backup-interface mac-duplicate <COUNT>**	<COUNT> – , [1..4].
3	, ( ).	**esr(config)# backup-interfacemac-per-second<COUNT>**	<COUNT> – MAC- , [50..400].
4	, ( ).	**esr(config)# backup-interface preemption**	

:

L2- ESR VLAN 50-55 SW1 SW2.

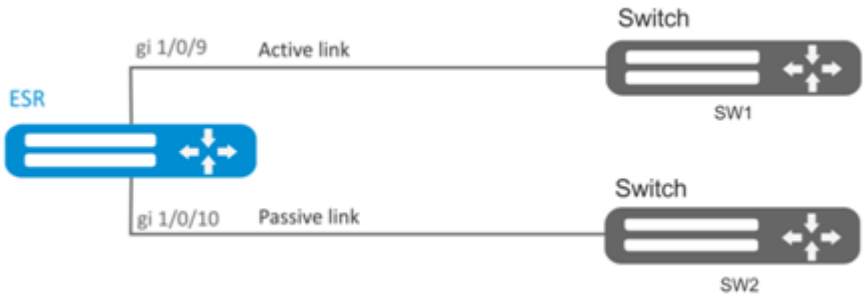

:

:

VLAN 50-55:

```
esr(config)# vlan 50-55
```

STP gigabitethernet 1/0/9 gigabitethernet 1/0/10, :

```
esr(config)# interface gigabitethernet 1/0/9-10
esr(config-if-gi)# spanning-tree disable
```

gigabitethernet 1/0/9 gigabitethernet 1/0/10 VLAN 50-55 general.

```
esr(config-if-gi)# switchport general allowed vlan add 50-55
esr(config-if-gi)# exit
```

:

gigabitethernet 1/0/10 gigabitethernet 1/0/9:

```
esr(config)# interface gigabitethernet 1/0/9
esr(config-if-gi)# backup interface gigabitethernet 1/0/10 vlan 50-55
```

:

```
esr# show interfaces backup
```

(SPAN/RSPAN)

(RSPAN) ESR-1000/1200/1500/1511/1700

— , ( ) ( ).

1	VLAN, ( ).	**esr(config)# port monitor remote vlan <VID> <DIRECTION>**	<VID> – VLAN, [2…4094]; <DIRECTION> – : • **tx** – VLAN ; • **rx** – VLAN .
2	( ).	**esr(config)# port monitor remote**	
3	( ).	**esr(config)# port monitor mode <MODE>**	<MODE> – : • **network** – ( ); • **monitor-only** – .
4	.	**esr(config-if-gi)# port monitor interface <IF> [<DIRECTION>]**	<IF> – c ; <DIRECTION> – : • **tx** – ; • **rx** – .

:

VLAN 50 gi1/0/11 .

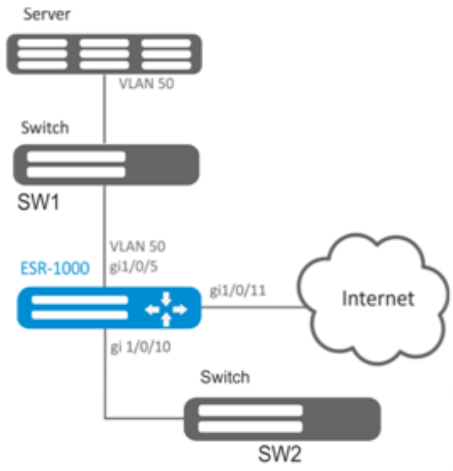

:

:

- VLAN 50;
- gi 1/0/5 VLAN 50 general.

:

VLAN, :

```
sr1000(config)# port monitor remote vlan 50
```

gi 1/0/5 :

```
sr1000(config)# interface gigabitethernet 1/0/5
sr1000(config-if-gi)# port monitor interface gigabitethernet 1/0/11
```

gi 1/0/5 :

```
sr1000(config-if-gi)# port monitor remote
```

LACP

LACP — , . .

1	LACP.	**esr(config)# lacp system-priority <PRIORITY>**	<PRIORITY> – , [1..65535]. : 1.
2	.	**esr(config)# port-channel load-balance { src-dst-mac-ip | src-dst-mac | src-dst-ip | src-dst-mac-ip-port }**	• **src - dst - mac - ip** – MAC- IP- ; • **src - dst - mac** – MAC- ; • **src - dst - ip** – IP- ; • **src - dst - mac - ip - port** – MAC-, IP- .

3	LACP.	**esr(config)# lacp timeout {short | long }**	• **long** – ; • **short** – . : long.
4	.	**esr(config)# interface port-channel <ID>**	<ID> – , [1..12].
5	.		
6	.	**esr(config)# interface <IF-TYPE><IF-NUM>**	<IF-TYPE> (gigabitethernet tengigabitethernet). <IF-NUM> – F/S/P – F- (1), S – (0), P – .
7	.	**esr(config-if-gi)# channel-group <ID> mode <MODE>**	<ID> – , [1..12]. <MODE> – : • **auto** – LACP; • **on** – .
8	LACP- Ethernet.	**esr(config-if-gi)# lacp port-priority <PRIORITY>**	<PRIORITY> – , [1..65535]. : 1
9	, - ( ).	**esr(config-subif)# load-average <TIME>**	<TIME> – , [5..150].
10	IPv4/IPv6 ARP-, ( ).	**esr(config-subif)# ip arp reachable-time <TIME>** **esr(config-subif)# ipv6 nd reachable-time <TIME>**	<TIME> – MAC-, . 5000 100000000 . [0,5;1,5] *<TIME>.
11	MTU (MaximumTransmitionUnit). MTU 1500 "system jumbo-frames" ( ).	**esr(config-subif)# mtu <MTU>**	<MTU> – MTU . : 1500.
12	( ).	**esr(config-subif)# history statistics**	
13	MSS (Maximum segment size) TCP- ( ).	**esr(config-subif)# ip tcp adjust-mss <MSS>** **esr(config-subif)# ipv6 tcp adjust-mss <MSS>**	<MSS> – MSS, [500..1460]. : 1460

:

- IPv4/IPv6- (. IP-, IPv6- DHCP-);
- Firewall (. Firewall);
- QoS (. QoS);
- proxy (. HTTP/HTTPS-);
- (. Netflow sFlow);
- (.);
- VRRF (.)
- BRAS (. BRAS (Broadband Remote Access Server));
- IDS/IPS (. IPS/IDS).

:

ESR .

:

:

gi1/0/1, gi1/0/2 «no security-zone».

:

port-channel 2:

```
esr(config)# interface port-channel 2
```

gi1/0/1, gi1/0/2 :

```
esr(config)# interface gigabitethernet 1/0/1-2
esr(config-if-gi)# channel-group 2 mode auto
```

port-channel .

AUX

ESR-21.

AUX , ESR.

1	.	**esr(config)# line aux <NUM>**	<NUM> – , [1..3].
2	( ). , , . .	**esr(config-line-aux) databits <BITS>** **esr(config-line-aux) flowcontrol <FMODE>** **esr(config-line-aux) parity <PMODE>** **esr(config-line-aux) speed <SPEED>** **esr(config-line-aux) stopbits <STOP-BITS>**	<BITS> - [7..8]; "8", <FMODE> – . : • software – ; • hardware – ; • disabled – ; "disabled", <PMODE> – . :
			• odd – ; • even – ; • none – ; "none", <SPEED> – /. : • 300; • 1200; • 2400; • 4800; • 9600; • 19200; • 38400; • 57600; • 115200; "115200", <STOP-BITS> - [1..2]; "1".
3	( ).	**esr(config-line-aux)# description <DESCRIPTION>**	<DESCRIPTION> – , 255 .
4	, ( ). : "transport telnet port".	**esr(config-line-aux)# modem inout**	
5	ESR TCP-, TCP- ESR telnet ( ). : "modem inout".	**esr(config-line-aux)# transport telnet port <PORT>**	<PORT> – TCP- . [1..65535].

1:

IP- ESR Serial-, Leased line ( ),

.

Modem Zyxel U-336E Plus.

:

ESR-21

:

```
esr-21-1(config)# line aux 2
esr-21-1(config-line-aux)# flowcontrol hardware
esr-21-1(config-line-aux)# exit
esr-21-1(config)#
```

RS-232 :

```
esr-21-1(config)# interface serial 1/0/2
esr-21-1(config-serial)# ip address 1.1.1.1/24
esr-21-1(config-serial)# exit
esr-21-1(config)#
```

firewall :

```
esr-21-1(config)# security zone xx
esr-21-1(config-zone)# exit
esr-21-1(config)# security zone-pair xx self
esr-21-1(config-zone-pair)#   rule 1
esr-21-1(config-zone-pair-rule)# action permit
esr-21-1(config-zone-pair-rule)# enable
esr-21-1(config-zone-pair-rule)# exit
esr-21-1(config-zone-pair)# exit
esr-21-1(config)#
```

:

```
esr-21-1(config)# interface serial 1/0/2
esr-21-1(config-serial)# security-zone xx
esr-21-1(config-serial)# exit
esr-21-1(config)#
```

ESR-21

:

```
esr-21-2(config)# line aux 2
esr-21-2(config-line-aux)# flowcontrol hardware
esr-21-2(config-line-aux)# exit
esr-21-2(config)#
```

RS-232 :

```
esr-21-2(config)# interface serial 1/0/2
esr-21-2(config-serial)# ip address 1.1.1.2/24
esr-21-2(config-serial)# exit
esr-21-2(config)#
```

firewall :

```
esr-21-2(config)# security zone xx
esr-21-2(config-zone)# exit
esr-21-2(config)# security zone-pair xx self
esr-21-2(config-zone-pair)#   rule 1
esr-21-2(config-zone-pair-rule)# action permit
esr-21-2(config-zone-pair-rule)# enable
esr-21-2(config-zone-pair-rule)# exit
esr-21-2(config-zone-pair)# exit
esr-21-2(config)#
```

:

```
esr-21-2(config)# interface serial 1/0/2
esr-21-2(config-serial)# security-zone xx
esr-21-2(config-serial)# exit
esr-21-2(config)#
```

2:

IP- ESR Serial-, Dial-Up ()

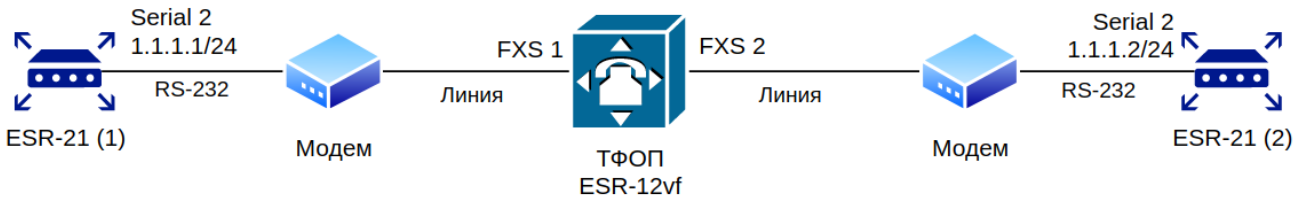

ESR-12VF :

```
dialplan pattern factory_test
  description "dialplan for factory test"
  pattern "S5, L5 (00[1-3]@{local} | [xABCD*#].S)"
  enable
exit
sip profile 1
  dialplan pattern "factory_test"
  enable
  proxy primary
    enable
    ip address proxy-server 192.0.2.5
    registration
    ip address registration-server 192.0.2.5
  exit
exit
interface voice-port 1
  sip user phone 001
  profile sip 1
exit
interface voice-port 2
  sip user phone 002
  profile sip 1
  caller-id mode fsk-bell
exit
```

- **Modem ZyXEL OMNI 56K (MINI)**
- **Modem Acorp-M56SCD**

:

ESR-21

:

```
esr-21-1(config)# line aux 2
esr-21-1(config-line-aux)# flowcontrol hardware
esr-21-1(config-line-aux)# modem inout
esr-21-1(config-line-aux)# exit
esr-21-1(config)#
```

RS-232 :

```
esr-21-1(config)# interface serial 1/0/2
esr-21-1(config-serial)# ip address 1.1.1.1/24
esr-21-1(config-serial)# exit
esr-21-1(config)#
```

firewall :

```
esr-21-1(config)# security zone xx
esr-21-1(config-zone)# exit
esr-21-1(config)# security zone-pair xx self
esr-21-1(config-zone-pair)#   rule 1
esr-21-1(config-zone-pair-rule)# action permit
esr-21-1(config-zone-pair-rule)# enable
esr-21-1(config-zone-pair-rule)# exit
esr-21-1(config-zone-pair)# exit
esr-21-1(config)#
```

:

```
esr-21-1(config)# interface serial 1/0/2
esr-21-1(config-serial)# security-zone xx
esr-21-1(config-serial)# exit
esr-21-1(config)#
```

:

```
esr-21-1(config)# interface serial 1/0/2
esr-21-1(config-serial)# dialer string 002
esr-21-1(config-serial)# dialer
esr-21-1(config-serial)# exit
esr-21-1(config)#
```

ESR-21

:

```
esr-21-2(config)# line aux 2
esr-21-2(config-line-aux)# flowcontrol hardware
esr-21-2(config-line-aux)# modem inout
esr-21-2(config-line-aux)# exit
esr-21-2(config)#
```

RS-232 :

```
esr-21-2(config)# interface serial 1/0/2
esr-21-2(config-serial)# ip address 1.1.1.2/24
esr-21-2(config-serial)# exit
esr-21-2(config)#
```

firewall :

```
esr-21-2(config)# security zone xx
esr-21-2(config-zone)# exit
esr-21-2(config)# security zone-pair xx self
esr-21-2(config-zone-pair)#   rule 1
esr-21-2(config-zone-pair-rule)# action permit
esr-21-2(config-zone-pair-rule)# enable
esr-21-2(config-zone-pair-rule)# exit
esr-21-2(config-zone-pair)# exit
esr-21-2(config)#
```

:

```
esr-21-2(config)# interface serial 1/0/2
esr-21-2(config-serial)# security-zone xx
esr-21-2(config-serial)# exit
esr-21-2(config)#
```

3:

2

- 1 V.22bis
-

ESR-21,

- AT&N1" - V.22bis
- ATM0L0 -

```
esr-21-1(config)# chat-script dial_test "ABORT 'BUSY' ABORT 'NO CARRIER' ABORT ERROR '' AT OK AT&F OK AT&N14 OK
ATM0L0 OK ATD\\T CONNECT ''"
esr-21-1(config)#
```

:

```
esr-21-1(config)# interface serial 1/0/2
esr-21-1(config-serial)# dialer string 001 modem-script dial_test
esr-21-1(config-serial)# exit
esr-21-1(config)#
```

ESR-21:

```
esr-21-2(config)# chat-script answer_test "ABORT 'BUSY' ABORT 'NO CARRIER' '' AT OK AT&F OK ATM0L0 RING ATAr
CONNECT ''"
esr-21-2(config)#
```

:

```
esr-21-2(config)# interface serial 1/0/2
esr-21-2(config-serial)# dialer string 000 modem-script answer_test
esr-21-2(config-serial)# exit
esr-21-2(config)#
```

RJ-45 <--> DB-25 pinout

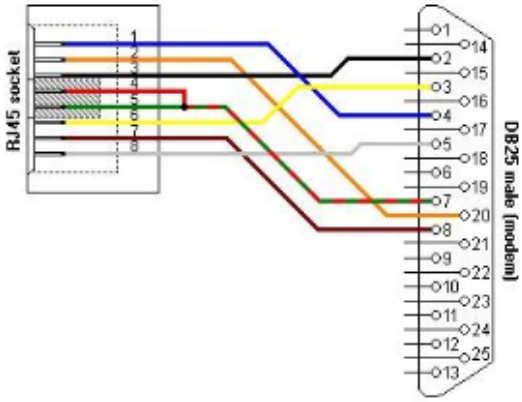

RJ-45 <--> RJ-45 pinout (rolled over cable)

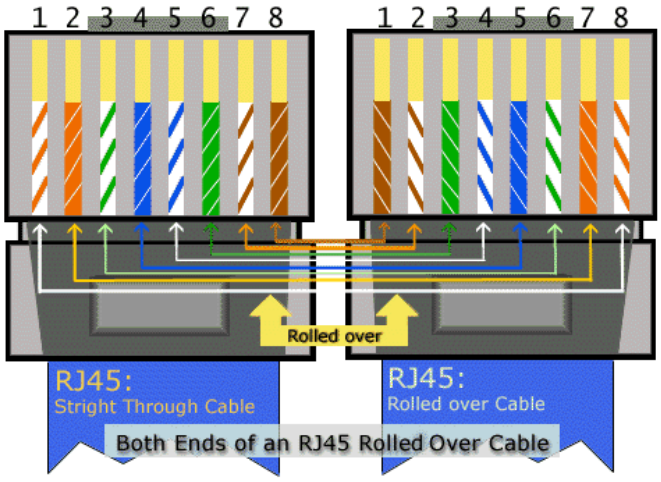
1 2 3 4 5 6 7 8
1 2 3 4 5 6 7 8
Rolled over
RJ45:
Stright Through Cable
RJ45:
Rolled over Cable
Both Ends of an RJ45 Rolled Over Cable