RIP

in/out				
Import		Network, Redistribute	Route-map — () _, . Prefix-list — () _, .	RIP
Export	,		Prefix-list — () . , . Prefix-list — () . , .	

OSPF

in/out				
Import		Network, Redistribute	Route-map — () _, . Prefix-list — () _, .	OSPF
Export	OSPF		Route-map — () . , . Prefix-list — () . , . *OSPF-: E2, E1*	

IS-IS

in/out				
Import		Network, Redistribute	Route-map — () _, . Prefix-list — () _, .	IS-IS
Export	IS-IS		Route-map — () ., . Prefix-list — () ., .	

iBGP

in/out				
Import		Network, Redistribute	Route-map — () _, . Prefix-list — () _, .	address-family, peer-group, neighbor
Export	, RIB BGP		Route-map — () ., . Prefix-list — () ., .	

eBGP

in/out				
Import		Network, Redistribute	Route-map — () _, . Prefix-list — () _, .	address-family, peer-group, neighbor
Export	. route-map prefix-list		Route-map — () ., . Prefix-list — () ., .	

— , .

:

```
esr(config)# ip route [ vrf <VRF> ] <SUBNET> { <NEXTHOP> | interface <IF> | tunnel <TUN> | wan load-balance rule <RULE> [<METRIC>] | blackhole | unreachable | prohibit } [ <METRIC> ] [ track <TRACK-ID> ] [ bfd ]
```

- <VRF> – VRF, 31 ;
- <SUBNET> – , :
  - AAA.BBB.CCC.DDD – IP- , [0..255];
  - AAA.BBB.CCC.DDD/NN – IP- , AAA-DDD [0..255] NN [1..32].
- <NEXTHOP> – IP- AAA.BBB.CCC.DDD, [0..255];
- <IF> – IP-, , ;
- <TUN> – , , ;
- <RULE> – wan, [1..50];
- blackhole – ;
- unreachable – , ICMP Destination unreachable (Host unreachable, code 1);
- prohibit – , ICMP Destination unreachable (Communication administratively prohibited, code 13);
- bfd – next-hop.

IPv6- :

```
ipv6 route [ vrf <VRF> ] <SUBNET> { <NEXTHOP> [ resolve ] | interface <IF> | wan load-balance rule <RULE> | blackhole | unreachable | prohibit } [ <METRIC> ] [ bfd ]
```

- <VRF> – VRF, 31 ;
- <SUBNET> – , :
  - X:X:X:X::X – IPv6- , [0..FFFF];
  - X:X:X:X::X/EE – IPv6- , X [0..FFFF] EE [1..128].
- <NEXTHOP> – IPv6- , X:X:X:X::X, [0..FFFF];
- resolve – IPv6- . , ;
- <IF> – IP-, , ;
- blackhole – ;

- unreachable – , ICMP Destination unreachable (Host unreachable, code 1);
- prohibit – , ICMP Destination unreachable (Communication administratively prohibited, code 13);
- [METRIC] – , [0..255].
- bfd – next-hop.

:

Internet 192.168.1.0/24 10.0.0.0/8, . R1 Internet. LAN, Internet WAN.

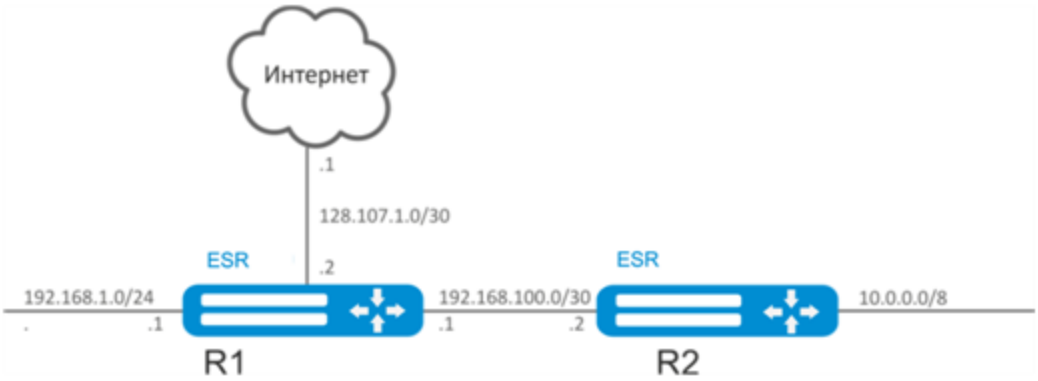

:

R1:

```
esr# hostname R1
```

gi1/0/1 192.168.1.1/24 «LAN». R1 192.168.1.0/24:

```
esr(config)# interface gi1/0/1
esr(config-if-gi)# security-zone LAN
esr(config-if-gi)# ip address 192.168.1.1/24
esr(config-if-gi)# exit
```

gi1/0/2 192.168.100.1/30 «LAN». R1 R2 :

```
esr(config)# interface gi1/0/2
esr(config-if-gi)# security-zone LAN
esr(config-if-gi)# ip address 192.168.100.1/30
esr(config-if-gi)# exit
```

gi1/0/3 128.107.1.2/30 «WAN». R1 Internet:

```
esr(config)# interface gi1/0/3
esr(config-if-gi)# security-zone WAN
esr(config-if-gi)# ip address 128.107.1.2/30
esr(config-if-gi)# exit
```

10.0.0.0/8, R2 (192.168.100.2):

```
esr(config)# ip route 10.0.0.0/8 192.168.100.2
```

Internet, nexthop (128.107.1.1):

```
esr(config)# ip route 0.0.0.0/0 128.107.1.1
```

R2:

```
esr# hostname R2
```

gi1/0/1 10.0.0.1/8 «LAN». R2 10.0.0.0/8:

```
esr(config)# interface gi1/0/1
esr(config-if-gi)# security-zone LAN
esr(config-if-gi)# ip address 10.0.0.1/8
esr(config-if-gi)# exit
```

gi1/0/2 192.168.100.2/30 «LAN». R2 R1 :

```
esr(config)# interface gi1/0/2
esr(config-if-gi)# security-zone LAN
esr(config-if-gi)# ip address 192.168.100.2/30
esr(config-if-gi)# exit
```

, nexthop IP- gi1/0/2 R1 (192.168.100.1):

```
esr(config)# ip route 0.0.0.0/0 192.168.100.1
```

:

```
esr# show ip route
```

RIP

RIP — - , . (hop), RIP, 15. RIP- 30 . RIP 3- TCP/IP, UDP- 520.

1	RIP- ( ).	**esr(config)# ip protocols rip preference <VALUE>**	<VALUE> – , [1..255]. : RIP (100).
2	RIP ( ).	**esr(config)# ip protocols rip max-routes <VALUE>**	<VALUE> – RIP , [1..10000]; : 10000.
3	IP-, IP-.	**esr(config)# ip prefix-list <NAME>**	<NAME> – , 31 .
4	(permit) (deny) .	**esr(config-pl)# permit {object-group <OBJ-GROUP-NETWORK-NAME > <ADDR/LEN> | <IPV6-ADDR/LEN> } [{ eq <LEN> | le <LEN> | ge <LEN> [le <LEN>] }]** **esr(config-pl)# deny {object-group <OBJ-GROUP-NETWORK-NAME> <ADDR/LEN> | <IPV6-ADDR/LEN> } [{ eq <LEN> | le <LEN> | ge <LEN> [le <LEN>] }**	<OBJ-GROUP-NETWORK-NAME> – IP -, 31 ; <LEN> – , [1..32] IP- ; • **eq** – ; • **le** – ; • **ge** – ; • **default - route** – .
5	RIP-.	**esr(config)# router rip** **esr(config-rip)#**	
6	RIP-.	**esr(config-rip)# enable**	
7	RIP ( ).	**esr(config-rip)# authentication algorithm { cleartext | md5 }**	• **cleartext** – , ; • **md5** – md5.

8	( ).	**esr(config-rip)# authentication key ascii-text { <CLEAR-TEXT> | encrypted <ENCRYPTED-TEXT> }**	<CLEAR-TEXT> – , 8 16 ; <ENCRYPTED-TEXT> – 8 16 (16 32) (0xYYYY...) (YYYY...).
9	md5 ( ).	**esr(config-rip)# authentication key-chain <KEYCHAIN>**	<KEYCHAIN> – , 16 .
10	/ /bridge, ( ).	**esr(config-rip)# passive-interface {<IF> | <TUN> }**	<IF> – ; <TUN> – .
11	, ( ).	**esr(config-rip)# timers update <TIME>**	<TIME> – , [1..65535]. : 180 .
12	( ).	**esr(config-rip)# timers invalid <TIME>**	<TIME> – , [1..65535]. : 180 .
13	, ( ).	**esr(config-rip)# timers flush <TIME>**	<TIME> – , [1..65535]. : «timersinvalid + 60» : 240 .
14	.	**esr(config-rip)# network <ADDR/LEN>**	<ADDR/LEN> – , : AAA.BBB.CCC.DDD/EE – IP- , AAA-DDD [0..255] EE [1..32].
15	( ).	**esr(config-rip)# prefix-list <PREFIX-LIST-NAME> { in | out }**	<PREFIX-LIST-NAME> – , 31 . • **in** – ; • **out** – .
16	, ( ).	**esr(config-rip)# redistribute static [route-map <NAME>]**	<NAME> – , , 31 .
		esr(config-rip)# redistribute connected [route-map <NAME>]	<NAME> – , , 31 .
		esr(config-rip)# redistribute ospf <ID><ROUTE-TYPE> [route-map <NAME>]	<ID> – , [1..65535]; <ROUTE-TYPE> – : • **intra - area** – OSPF- ; • **inter - area** – OSPF- ; • **external 1** – OSPF- 1; • **external 2** – OSPF- 2; <NAME> – , OSPF-, 31 .
		esr(config-rip)# redistribute bgp <AS> [route-map <NAME>]	<AS> – , [1..4294967295]; <NAME> – , BGP-, 31 .
17	// .	**esr(config)# interface <IF-TYPE><IF-NUM>**	<IF-TYPE> ; <IF-NUM> – F/S/P – F- (1), S – (0), P – .
		esr(config)# tunnel <TUN-TYPE><TUN-NUM>	<TUN-TYPE> ; <TUN-NUM> .
		esr(config)# bridge <BR-NUM>	<BR-NUM> – bridge.
18	RIP- ( ).	**esr(config-if-gi)# ip rip metric <VALUE>**	<VALUE> – , [0..32767]. : 5.
19	RIP ( ).	**esr(config-if-gi)# ip rip mode <MODE>**	<MODE> – : • **multicast** – ; • **broadcast** – ; • **unicast** – unicast- . : multicast.
20	IP-unicast- ( ).	**esr(config-if-gi)# ip rip neighbor <ADDR>**	<ADDR> – IP-, AAA.BBB.CCC.DDD, [0..255].
21	( ).	**esr(config-if-gi)# ip rip summary-address <ADDR/LEN>**	<ADDR/LEN> – IP- , AAA.BBB.CCC.DDD /EE, AAA – DDD [0..255] EE [1..32].

RIP

:

RIP . 115.0.0.0/24, 14.0.0.0/24, 10.0.0.0/24. 25 .

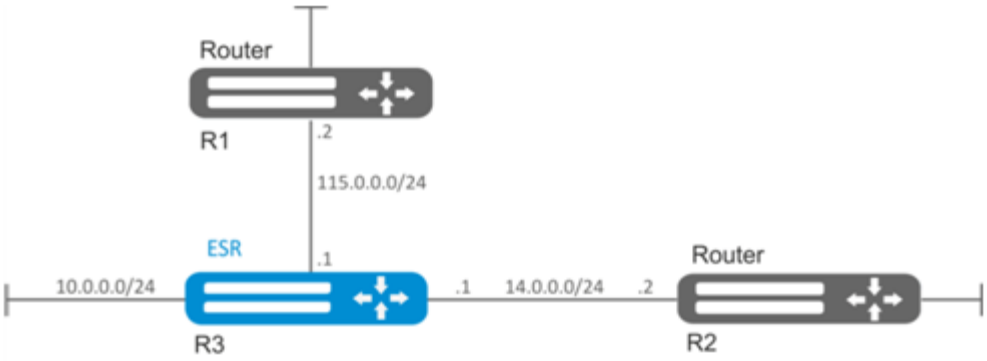

:

IP- , .

RIP:

```
esr(config)# router rip
```

, : 115.0.0.0/24, 14.0.0.0/24 10.0.0.0/24:

```
esr(config-rip)# network 115.0.0.0/24
esr(config-rip)# network 14.0.0.0/24
esr(config-rip)# network 10.0.0.0/24
```

:

```
esr(config-rip)# redistribute static
```

, :

```
esr(config-rip)# timers update 25
```

:

```
esr(config-rip)# enable
```

RIP :

```
esr# show ip rip
```

RIP, firewall UDP- 520.

OSPF

OSPF — , (link-state technology) .

1	OSPF- ( ).	**esr(config)# ip protocols ospf preference <VALUE>**	<VALUE> – , [1..255].

		esr(config-vrf)# ip protocols ospf preference <VALUE>	: 150.
2	OSPF ( ).	**esr(config)# ip protocols ospf max-routes <VALUE>** **esr(config)# ipv6 protocols ospf max-routes <VALUE>**	<VALUE> – OSPF , : • ESR-1000/1200/1500 /1511/1700/3100 – [1..500000]; • ESR-20/21/100/200 – [1..300000]; • ESR-10/12V(F)/14VF – [1..30000] : • ESR-1000/1200/1500 /1511/1700/3100 – (500000); • ESR-20/21/100/200 – (300000); • ESR-10/12V(F)/14VF – (30000). VRF: 0
3	OSPF ( ).	**esr(config)# router ospf log-adjacency-changes** **esr(config)# ipv6 router ospf log-adjacency-changes**	
4	IP-, IP-.	**esr(config)# ip prefix-list <NAME>** **esr(config)# ipv6 prefix-list <NAME>**	<NAME> – , 31 .
5	(permit) (deny) .	**esr(config-pl)# permit [{ object-group <OBJ-GROUP-NETWORK-NAME> | <ADDR/LEN> | <IPV6-ADDR/LEN> }] [{ eq <LEN> | le <LEN> | ge <LEN> [le <LEN>] }]** **esr(config-pl)# deny [{ object-group <OBJ-GROUP-NETWORK-NAME> | <ADDR /LEN > | <IPV6-ADDR/LEN> }] [{ eq <LEN> | le <LEN> | ge <LEN> [le <LEN>] }]**	<OBJ-GROUP-NETWORK-NAME> – IPv4/IPv6 -, 31 ; <ADDR> – IP-, AAA.BBB.CCC.DDD, [0..255]; <LEN> – , [1..32] IP- ; • **eq** – ; • **le** – ; • **ge** – ;
6	OSPF- OSPF-.	**esr(config)# router ospf <ID> [vrf <VRF>]** **esr(config)# ipv6 router ospf <ID> [vrf <VRF>]**	<ID> – , [1..65535] <VRF> – VRF, 31 , .
7	OSPF-.	**esr(config-ospf)# router-id <ID>** **esr(config-ipv6-ospf)# router-id <ID>**	<ID> – , AAA.BBB.CCC.DDD, [0.. 255].
8	OSPF.	**esr(config-ospf)# preference <VALUE>** **esr(config-ipv6-ospf)# preference <VALUE>**	<VALUE> – OSPF, [1..255]. : 10.
9	RFC 1583 ( ).	**esr(config-ospf)# compatible rfc1583** **esr(config-ipv6-ospf)# compatible rfc1583**	
11	( ).	**esr(config-ospf)# prefix-list <PREFIX-LIST-NAME> { in | out }** **esr(config-ipv6-ospf)# prefix-list <PREFIX-LIST-NAME> { in | out }**	<PREFIX-LIST-NAME> – , 31 . • **in** – ; • **out** – .
12	, ( ).	**esr(config-ospf)# redistribute static [route-map <NAME>]** **esr(config-ipv6-ospf)# redistribute static [route-map <NAME>]**	<NAME> – , , 31 .
		esr(config-ospf)# redistribute connected [route-map <NAME>] **esr(config-ipv6-ospf)# redistribute connected [route-map <NAME>]**	<NAME> – , , 31 .
		esr(config-ospf)# redistribute rip [route-map <NAME>]	<NAME> – , RIP-, 31 .
		esr(config-ospf)# redistribute bgp <AS> [route-map <NAME>] **esr(config-ipv6-ospf)# redistribute bgp <AS> [route-map <NAME>]**	<AS> – , [1..4294967295]; <NAME> – , BGP-, 31 .
13	OSPF-.	**esr(config-ospf)# enable** **esr(config-ipv6-ospf)# enable**	
14	OSPF- .	**esr(config-ospf)# area <AREA_ID>** **esr(config-ipv6-ospf)# area <AREA_ID>**	<AREA_ID> – , AAA.BBB.CCC.DDD, [0..255].
15	.	**esr(config-ospf-area)# network <ADDR/LEN>**	<ADDR/LEN> – , : AAA.BBB.CCC.DDD/EE – IP- , AAA-DDD [0..255] EE [1..32].
		esr(config-ipv6-ospf-area)# network <IPV6-ADDR/LEN>	<IPV6-ADDR/LEN> – IPv6- , X:X:X:X:: X/EE, X [0..FFFF] EE [1..128].

16		**esr(config-ospf-area)# area-type <TYPE> [no-summary]** **esr(config-ipv6-ospf-area)# area-type <TYPE> [no-summary]**	<TYPE> – : • **stub** – stub ( ); no-summary – «stub» «totallystubby» ( ). • **nssa** – nssa (NSSA); no-summary – nssa totallynssa ( ).
17	NSSA- NSSA-LSA.	**esr(config-ospf-area)# default-information-originate** **esr(config-ipv6-ospf-area)# default-information-originate**	
18	.	**esr(config-ospf-area)# summary-address <ADDR/LEN> { advertise | not-advertise }**	<ADDR/LEN> – IP- , AAA.BBB.CCC.DDD/EE, AAA – DDD [0..255] EE [1..32]; • **advertise** – ; • **not - advertise** – , , .
		esr(config-ipv6-ospf-area)# summary-address <IPV6-ADDR/LEN> { advertise | not-advertise }	<IPV6-ADDR/LEN> – IPv6- , X:X:X:X::X/EE, X [0..FFFF] EE [1..128]; • **advertise** – , , ; • **not-advertise** – .
19	OSPF-.	**esr(config-ospf-area)# enable** **esr(config-ipv6-ospf-area)# enable**	
20	, .	**esr(config-ospf-area)# virtual-link <ID>** **esr(config-ipv6-ospf-area)# virtual-link <ID>**	<ID> – , , AAA.BBB.CCC.DDD, [0..255].
21	, , (, DatabaseDescription LinkStateRequest).	**esr(config-ospf- vlink)# restransmit-interval <TIME>** **esr(config-ipv6-ospf- vlink)# restransmit-interval <TIME>**	<TIME> – , [1..65535]. : 5 .
22	, hello-.	**esr(config-ospf- vlink)# hello-interval <TIME>** **esr(config-ipv6-ospf- vlink)# hello-interval <TIME>**	<TIME> – , [1..65535]. : 10 .
23	, . «hello-interval».	**esr(config-ospf- vlink)# dead-interval <TIME>** **esr(config-ipv6-ospf- vlink)# dead-interval <TIME>**	<TIME> – , [1..65535]. : 40 .
24	, DR	**esr(config-ospf- vlink)# wait-interval <TIME>** **esr(config-ipv6-ospf- vlink)# wait-interval <TIME>**	<TIME> – , [1..65535]. : 40
25		**esr(config-ospf- vlink)# authentication algorithm <ALGORITHM>**	<ALGORITHM> – : • **cleartext** – , (RIP OSPF-VLINK); • **md 5** – md5.
26	.	**esr(config-ospf- vlink)# authentication key ascii-text { <CLEAR-TEXT> | encrypted <ENCRYPTED-TEXT> }**	<CLEAR-TEXT> – , 8 16 . <ENCRYPTED-TEXT> – 8 16 (16 32) (0xYYYY...) (YYYY...).
27	md5.	**esr(config-ospf- vlink)# authentication key chain <KEYCHAIN>**	<KEYCHAIN> – , 16 .
28	.	**esr(config-ospf- vlink)# enable**	
29	// .	**esr(config)# interface <IF-TYPE><IF-NUM>**	<IF-TYPE> ; <IF-NUM> – F/S/P – F- (1), S – (0), P – .
		esr(config)# tunnel <TUN-TYPE><TUN-NUM>	<TUN-TYPE> ; <TUN-NUM> .
		esr(config)# bridge <BR-NUM>	<BR-NUM> – bridge.
30	// OSPF-.	**esr(config-if-gi)# ip ospf instance <ID>** **esr(config-if-gi)# ipv6 ospf instance <ID>**	<ID> – , [1..65535].
31	OSPF-.	**esr(config-if-gi)# ip ospf area <AREA_ID>** **esr(config-if-gi)# ipv6 ospf area <AREA_ID>**	<AREA_ID> – , AAA.BBB.CCC.DDD, [0..255].
32	OSPF .	**esr(config-if-gi)# ip ospf** **esr(config-if-gi)# ipv6 ospf**	
33		**esr(config-if-gi)# ip ospf mtu-ignore**	

	, OSPF- MTU Database Description-.	**esr(config-if-gi)# ipv6 ospf mtu-ignore**	
34	OSPF.	**esr(config-if-gi)# ip ospf authentication algorithm <ALGORITHM>**	<ALGORITHM> – : • **cleartext** – , ; • **md 5** – md5.
35	OSPF- .	**esr(config-if-gi)# ip ospf authentication key ascii-text { <CLEAR-TEXT> | encrypted <ENCRYPTED-TEXT> }**	<CLEAR-TEXT> – , 8 16 ; <ENCRYPTED-TEXT> – 8 16 (16 32) (0xYYYY...) (YYYY...).
36	md5 .	**esr(config-if-gi)# ip ospf authentication key-chain <KEYCHAIN>**	<KEYCHAIN> – , 16 .
37	, DR .	**esr(config-if-gi)# ip ospf wait-interval <TIME>**	<TIME> – , [1..65535].
		esr(config-if-gi)# ipv6 ospf wait-interval <TIME>	: 40 .
38	, , (, DatabaseDescription LinkStateRequest).	**esr(config-if-gi)# ip ospf restransmit-interval <TIME>**	<TIME> – , [1..65535].
		esr(config-if-gi)# ipv6 ospf restransmit-interval <TIME>	: 5 .
39	, hello-.	**esr(config-if-gi)# ip ospf hello-interval <TIME>**	<TIME> – , [1..65535].
		esr(config-if-gi)# ipv6 ospf hello-interval <TIME>	: 10 .
40	, . hello-interval.	**esr(config-if-gi)# ip dead-interval <TIME>**	<TIME> – , [1..65535].
		esr(config-if-gi)# ipv6 dead-interval <TIME>	: 40 .
41	, NBMA- , HELLO- , , .	**esr(config-if-gi)# ip poll-interval <TIME>**	<TIME> – , [1 .. 65535].
		esr(config-if-gi)# ipv6 poll-interval <TIME>	: 120 .
42	IP- NMBA P2MP (Point-to-MultiPoint) .	**esr(config-if-gi)# ip ospf neighbor <IP> [eligible]**	<IP> – IP- , AAA.BBB.CCC.DDD, [0..255]. **eligible** – , DR NBMA-. .
		esr(config-if-gi)# ip ospf neighbor <IP> [eligible]	<IPV6-ADDR> – IPv6- , X:X:X:X::X, [0..FFFF]; **eligible** – , DR NBMA-. .
43	OSPF-.	**esr(config-if-gi)# ip ospf network <TYPE>**	<TYPE> – : • **broadcast** – ; • **non - broadcast** – NBMA; • **point - to - multipoint** – -; • **point-to-multipoint non-broadcast** – NBMA -; • **point - to - point** – -. : broadcast.
		esr(config-if-gi)# ipv6 ospf network <TYPE>	
44	, DR BDR.	**esr(config-if-gi)# ip ospf priority <VALUE>**	<VALUE> – , [1..65535].
		esr(config-if-gi)# ipv6 ospf priority <VALUE>	: 120.
45	.	**esr(config-if-gi)# ip ospf cost <VALUE>**	<VALUE> – , [0..32767].
		esr(config-if-gi)# ipv6 ospf cost <VALUE>	: 150.
47	BFD OSPF	**esr(config-if-gi)# ip ospf bfd-enable**	
		esr(config-if-gi)# ipv6 ospf bfd-enable	

OSPF

:

OSPF . 1.1.1.1 , RIP.

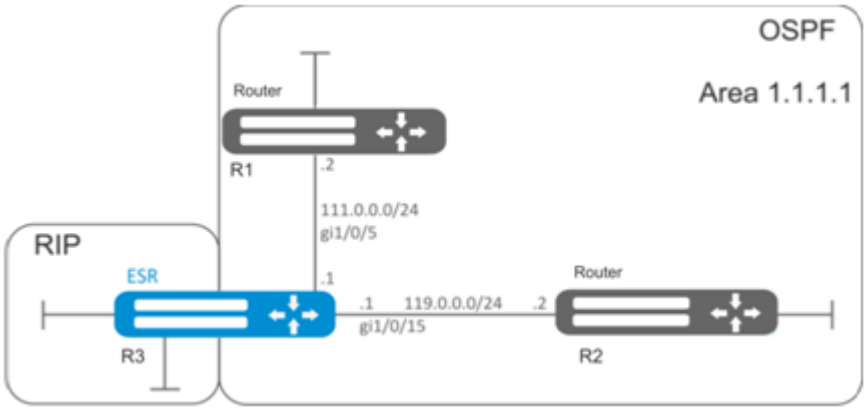

:

IP- , .

OSPF- 10 OSPF:

```
esr(config)# router ospf 10
```

.

```
esr(config-ospf)# area 1.1.1.1
esr(config-ospf-area)# enable
esr(config-ospf-area)# exit
```

RIP:

```
esr(config-ospf)# redistribute rip
```

OSPF-:

```
esr(config-ospf)# enable
esr(config-ospf)# exit
```

gi1/0/5 gi1/0/15. OSPF- . OSPF:

```
esr(config)# interface gigabitethernet 1/0/5
esr(config-if-gi)# ip ospf instance 10
esr(config-if-gi)# ip ospf area 1.1.1.1
esr(config-if-gi)# ip ospf
esr(config-if-gi)# exit
```

```
esr(config)# interface gigabitethernet 1/0/15
esr(config-if-gi)# ip ospf instance 10
esr(config-if-gi)# ip ospf area 1.1.1.1
esr(config-if-gi)# ip ospf
esr(config-if-gi)# exit
esr(config)# exit
```

OSPF stub area

:

1.1.1.1, . , RIP.

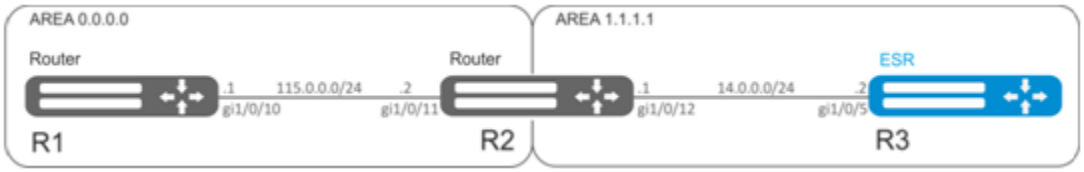

:

OSPF IP- , .

. 1.1.1.1 :

```
esr(config-ospf-area)# area-type stub
```

R3 RIP:

```
esr(config-ospf)# redistribute rip
```

Virtual link

:

virtual link.

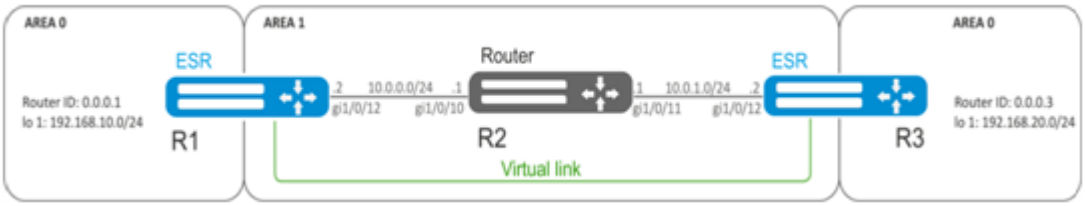

:

Virtual link — , . (Area Border Router, ABR).

OSPF IP- , .

R1 1.1.1.1:

```
esr(config-ospf)# area 1.1.1.1
```

virtual link 0.0.0.3 :

```
esr(config-ospf-area)# virtual-link 0.0.0.3
esr(config-ospf-vlink)# enable
```

R3 1.1.1.1:

```
esr(config-ospf)# area 1.1.1.1
```

virtual link 0.0.0.1 :

```
esr(config-ospf-area)# virtual-link 0.0.0.1
esr(config-ospf-vlink)# enable
```

R1:

```
esr# show ip route
C     * 10.0.0.0/24        [0/0]   dev gi1/0/12,                   [direct 00:49:34]
O     * 10.0.1.0/24        [150/20] via 10.0.0.1 on gi1/0/12,      [ospf1 00:49:53]  (0.0.0.3)
O     * 192.168.20.0/24    [150/30] via 10.0.0.1 on gi1/0/12,      [ospf1 00:50:15]  (0.0.0.3)
C     * 192.168.10.0/24    [0/0]   dev lo1,                        [direct 21:32:01]
```

R3:

```
esr# show ip route
O     * 10.0.0.0/24        [150/20] via 10.0.1.1 on gi1/0/12,      [ospf1 14:38:35]  (0.0.0.2)
C     * 10.0.1.0/24        [0/0]   dev gi1/0/12,                   [direct 14:35:34]
C     * 192.168.20.0/24    [0/0]   dev lo1,                        [direct 14:32:58]
O     * 192.168.10.0/24    [150/30] via 10.0.1.1 on gi1/0/12,      [ospf1 14:39:54]  (0.0.0.1)
```

OSPF , R1 , R3, .

:

```
esr# show ip ospf neighbors 10
```

OSPF :

```
esr# show ip ospf 10
```

firewall OSPF (89).

BGP

BGP ( ), , . , . , .

BGP- firewall TCP- 179.

1	BGP- ( ).	**esr(config)# ip protocols bgp preference <VALUE>**	<VALUE> – , [1..255]. : BGP (170).
2	BGP ( ).	**esr(config)# ip protocols bgp max-routes <VALUE>** **esr(config)# ipv6 protocols bgp max-routes <VALUE>** **esr(config-vrf)# ip protocols bgp max-routes <VALUE>** **esr(config-vrf)# ipv6 protocols bgp max-routes <VALUE>**	<VALUE> – BGP , : • ESR-1000/1200/1500 /1511/1700/3100 – [1..5000000]; • ESR-20/21/100/200 – [1.. 2500000]; • ESR-10/12V(F)/14VF – [1.. 1000000]. : • ESR-1000/1200/1500 /1511/1700/3100 – [5000000]; • ESR-20/21/100/200 – [2500000]; • ESR-10/12V/12VF/14VF – [1000000]. VRF: 0.
3	BGP ( ).	**esr(config)# router bgp log-neighbor-changes** **esr(config)# ipv6 router bgp log-neighbor-changes**	

4	ECMP .	**esr(config)# router bgp maximum-paths <VALUE>**	<VALUE> – , [1..16].
5	. (eBGP)		
5.1.1	route-map , IP-.	**esr(config)# route-map <NAME>**	<NAME> – , 31 .
5.1.2		**(config-route-map)# rule <ORDER>**	<ORDER> – , [1 .. 10000].
5.1.3	, .	**esr(config-route-map-rule)#match ip address { <ADDR/LEN> | object-group <OBJ-GRP-NETNAME> } [{ eq <LEN> | le <LEN> | ge <LEN 1> [le <LEN 2>] }]** **esr(config-route-map-rule)#match ipv6 address { <IPV6-ADDR/LEN> | object-group <OBJ-GRP-NETNAME> } [{ eq <LEN> | le <LEN> | ge <LEN 1> [le <LEN 2>] }]**	<ADDR/LEN> – IP- , : • AAA.BBB.CCC.DDD/EE – IP- , AAA-DDD [0..255] EE [1..32]; <IPV6-ADDR/LEN> – IPv6- , : • X:X:X:X::X/EE, X [0..FFFF] EE [1..128]; <OBJ-GRP-NETNAME> – IP -, 31 *; <LEN>, <LEN 1>, <LEN 2> – , [1..32] IP- IPv4 [1..128] IPv6; **eq** – ; **le** – ; **ge** – ; **ge** <LEN 1> **le** <LEN 2> – <LEN> <LEN1>. * object-group, .
5.1.4	(permit) (deny) .	**esr(config-route-map-rule)# action {deny | permit}**	
5.2.1	- IP-, IP-.	**esr(config)# ip prefix-list <NAME>** **esr(config)# ipv6 prefix-list <NAME>**	<NAME> – , 31 .
5.2.2	(permit) (deny) .	**esr(config-pl)# permit { <ADDR/LEN> | object-group <OBJ-GRP-NETNAME>} [{ eq <LEN> | le <LEN> | ge <LEN 1> [le <LEN 2>] }]** **esr(config-pl)# deny {<ADDR/LEN> | object-group <OBJ-GRP-NETNAME>} [{ eq <LEN> | le <LEN> | ge <LEN 1> [le <LEN 2>] }]** **esr(config-ipv6-pl)# permit { <IPV6-ADDR/LEN> | object-group <OBJ-GRP-NETNAME>} [{ eq <LEN> | le <LEN> | ge <LEN 1> [le <LEN 2>] }]** **esr(config-ipv6-pl)# deny {<IPV6-ADDR/LEN> | object-group <OBJ-GRP-NETNAME> } [{ eq <LEN> | le <LEN> | ge <LEN 1> [le <LEN 2>] }]**	<ADDR/LEN> – IP- , : • AAA.BBB.CCC.DDD/EE – IP- , AAA-DDD [0..255] EE [1..32]; <IPV6-ADDR/LEN> – IPv6- , : • X:X:X:X::X/EE, X [0..FFFF] EE [1..128]; <OBJ-GRP-NETNAME> – IP -, 31 *; <LEN>, <LEN 1>, <LEN 2> – , [1..32] IP- IPv4 [1..128] IPv6; **eq** – ; **le** – ; **ge** – ; **ge** <LEN 1> **le** <LEN 2> – <LEN> <LEN1>. * object-group, .
6	BGP- BGP-.	**esr(config)# router bgp <AS>**	<AS> – , [1..4294967295].
7	.	**esr(config-bgp)# router-id <ID>**	<ID> – , AAA.BBB.CCC.DDD, [0..255].
8	Route-Reflector , BGP- . ( )	**esr(config-bgp)# cluster-id <ID>**	<ID> – Route-Reflector , AAA.BBB.CCC.DDD, [0..255].
9	, FIB. ( )	**esr(config-bgp)# default-information-originate**	
10	, . ( )	**esr(config-bgp-af)# timers keeaplive <TIME>**	<TIME> – , [1..65535]. : 60 .
11	, . ( )	**esr(config-bgp-af)# timers holdtime <TIME>**	<TIME> – , [1..65535]. : 180 .

12	, , ( )	**esr(config-bgp-af)# timers error-wait <TIME1> <TIME2>**	<TIME1> – , [1..65535]; <TIME2> – , [1..65535].
13	( ).	**esr(config-bgp)# authentication algorithm <ALGORITHM>**	<ALGORITHM> – : • md5 – md5. :
14	. ("authentication algorithm")	**esr(config-bgp)# authentication key ascii-text { <CLEAR-TEXT> | encrypted <ENCRYPTED-TEXT> }**	<CLEAR-TEXT> – , 8 16 ; <ENCRYPTED-TEXT> – 8 16 (16 32) (0xYYYY...) (YYYY...).
15	BGP-.	**esr(config-bgp)# enable**	
16	.	**esr(config-bgp)# address-family { ipv4 | ipv6 } unicast**	**ipv 4** – IPv4; **ipv 6** – IPv6;
17	BGP ( ).	**esr(config-bgp-af)# redistribute static [route-map <NAME>]**	<NAME> – , , 31 .
		esr(config-bgp-af)# redistribute connected [route-map <NAME>]	<NAME> – , , 31 .
		esr(config-bgp-af)# redistribute rip [route-map <NAME>]	<NAME> – , RIP-, 31 .
		esr(config-bgp-af)# redistribute ospf <ID> <ROUTE-TYPE 1> [<ROUTE-TYPE 2>] [<ROUTE-TYPE 3>] [<ROUTE-TYPE 4>] [route-map <NAME>]	<ID> – , {1..65535}; <ROUTE-TYPE> – : • **intra - area** – OSPF- ; • **inter - area** – OSPF- ; • **external 1** – OSPF- 1; • **external 2** – OSPF- 2; <NAME> – , OSPF-, 31 .
		esr(config-bgp-af)# redistribute bgp <AS> [route-map <NAME>]	<AS> – , [1..4294967295]; <NAME> – , BGP-, 31 .
18	.	**esr(config-bgp-af)# network <ADDR/LEN>**	<ADDR/LEN> – , : • AAA.BBB.CCC.DDD/EE – IP- , AAA-DDD [0..255] EE [1..32]; • X:X:X:X::X/EE – IPv6- , X [0..FFFF] EE [1..128].
19	BGP	**esr(config-bgp-af)# exit**	
20	BGP- BGP-.	**esr(config-bgp)# neighbor <ADDR>|<IPV6-ADDR>**	<ADDR> – IP- , AAA.BBB.CCC.DDD, [0..255]; <IPV6-ADDR> – IPv6- , X:X:X:X::X, [0..FFFF].
21	( ).	**esr(config-bgp-neighbor)# description <DESCRIPTION>**	<DESCRIPTION> – , 255 .
22	, . ( )	**esr(config-bgp-neighbor)# timers keepalive <TIME>**	<TIME> – , [1..65535]. : 60 .
23	, ( ).	**esr(config-bgp- neighbor)# timers holdtime <TIME>**	<TIME> – , [1..65535]. : 180 .
24	, , ( ).	**esr(config-bgp-af)# timers error-wait <TIME1> <TIME2>**	<TIME1> – , [1..65535]; <TIME2> – , [1..65535]. : 60 300
25	BGP-.	**esr(config-bgp-neighbor)# remote-as <AS>**	<AS> – , [1..4294967295].
26	, ( )	**esr(config-bgp-neighbor)# ebgp-multihop <NUM>**	<NUM> – EBGP (TTL).
27	, BGP- Route-Reflector . ( )	**esr(config-bgp-neighbor)# route-reflector-client**	
28	IP/IPv6- , IP/IPv6-BGP. ( )	**esr(config-bgp-neighbor)# update-source { <ADDR> | <IPV6-ADDR> }**	<ADDR> – IP- , AAA.BBB.CCC.DDD, [0..255]; <IPV6-ADDR> – IPv6- , X:X:X:X::X, [0..FFFF].
29	, BGP-, AS Path . ( )	**esr(config-bgp-neighbor)# allow-local-as <NUMBER>**	<NUMBER> – AS Path, , [1..10].

30	BFD- BGP-. (, update-source)	**esr(config-bgp-neighbor)# bfd-enable**	
31	. ( )	**esr(config-bgp-neighbor)# authentication algorithm <ALGORITHM>**	<ALGORITHM> – : md5 – md5.
32	. ( )	**esr(config-bgp-neighbor)# authentication key ascii-text { <CLEAR-TEXT> | encrypted <ENCRYPTED-TEXT> }**	<CLEAR-TEXT> – , 8 16 ; <ENCRYPTED-TEXT> – 8 16 (16 32) (0xYYYY...) (YYYY...).
33		**esr(config-bgp-neighbor)# enable**	
34	.	**esr(config-bgp-neighbor)# address-family { ipv4 | ipv6 | vpnv4 } unicast**	**ipv 4** – IPv4; **ipv 6** – IPv6; **vpnv4** – VPNv4;
35	- (eBGP).	**esr(config-bgp-neighbor-af)# prefix-list <PREFIX-LIST-NAME> { in | out }**	<PREFIX-LIST-NAME> – , 31 . **in** – ; **out** – .
36	, BGP- . (, vpnv4)	**esr(config-bgp-neighbor-af)# default-originate**	
37	, BGP- next-hop IP- . (, vpnv4)	**esr(config-bgp-neighbor-af)# next-hop-self**	
38	, . ( )	**esr(config-bgp-neighbor-af)# preference <VALUE>**	<VALUE> – , [1..255]. : 170.
39	, BGP- AS Path (RFC 6996). (, vpnv4)	**esr(config-bgp-neighbor-af)# remove-private-as [{ all | nearest | replace }]**	**all** - AS AS-path; **nearest** - AS AS-path AS; **replace** - AS BGP. : all.
40		**esr(config-bgp-neighbor-af)# enable**	

, iBGP, bgp bgp neighbor . bgp peer-group, , bgp neighbor bgp peer-group.

:

BGP- R3 :

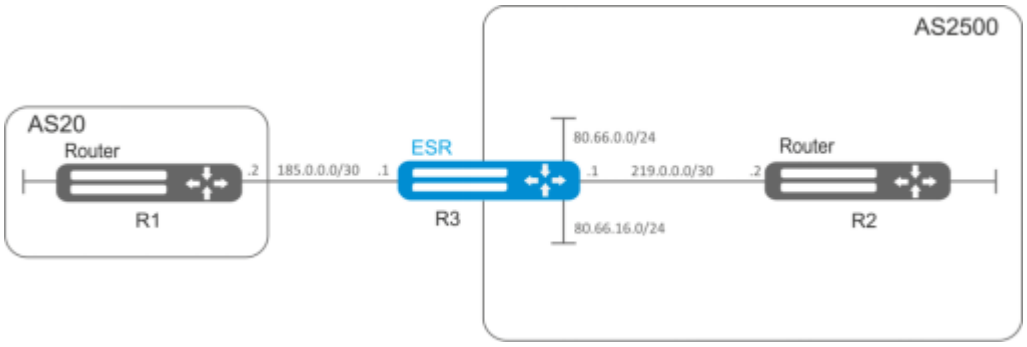

- : 80.66.0.0/24, 80.66.16.0/24;
- , ;
- AS 2500;
- – 219.0.0.0/30, IP- 219.0.0.1, IP- 219.0.0.2, AS2500;
- – 185.0.0.0/30, IP- 185.0.0.1, IP- 185.0.0.2, AS20

:

:

```
esr-R3(config)# interface gigabitethernet 1/0/1
esr-R3(config-if-gi)# ip address 185.0.0.1/30
esr-R3(config-if-gi)# exit
esr-R3(config)# interface gigabitethernet 1/0/2
esr-R3(config-if-gi)# ip address 219.0.0.1/30
esr-R3(config-if-gi)# exit
esr-R3(config)# interface gigabitethernet 1/0/3
esr-R3(config-if-gi)# ip address 80.66.0.1/24
esr-R3(config-if-gi)# exit
esr-R3(config)# interface gigabitethernet 1/0/4
esr-R3(config-if-gi)# ip address 80.66.16.1/24
esr-R3(config-if-gi)# exit
```

firewall BGP- WAN:

```
esr-R3(config)# object-group service og_bgp
esr-R3(config-object-group-service)# port-range 179
esr-R3(config-object-group-service)# exit
esr-R3(config)# security zone wan
esr-R3(config-zone)# exit
esr-R3(config)# security zone-pair wan self
esr-R3(config-zone-pair)# rule 100
esr-R3(config-zone-pair-rule)# match protocol tcp
esr-R3(config-zone-pair-rule)# match destination-port og_bgp
esr-R3(config-zone-pair-rule)# action permit
esr-R3(config-zone-pair-rule)# enable
esr-R3(config-zone-pair-rule)# exit
esr-R3(config-zone-pair)# exit
```

:

```
esr-R3(config)# interface gigabitethernet 1/0/1
esr-R3(config-if-gi)# security-zone wan
esr-R3(config-if-gi)# exit
esr-R3(config)# interface gigabitethernet 1/0/2
esr-R3(config-if-gi)# security-zone wan
esr-R3(config-if-gi)# exit
```

route-map, AS:

```
esr-R3(config)# route-map bgp-general
esr-R3(config-route-map)# rule 1
esr-R3(config-route-map-rule)# match ip address 80.66.0.0/24
esr-R3(config-route-map-rule)# match ip address 80.66.16.0/24
esr-R3(config-route-map-rule)# action permit
esr-R3(config-route-map-rule)# exit
esr-R3(config-route-map)# exit
```

BGP AS 2500 :

```
esr(config)# router bgp 2500
```

, :

```
esr-R3(config-bgp)# address-family ipv4 unicast
esr-R3(config-bgp-af)# redistribute connected
esr-R3(config-bgp-af)# exit
```

R2 iBGP:

```
esr-R3(config-bgp)# neighbor 219.0.0.2
esr-R3(config-bgp-neighbor)# remote-as 2500
esr-R3(config-bgp-neighbor)# enable
```

IPv4-:

```
esr-R3(config-bgp-neighbor)# address-family ipv4 unicast
esr-R3(config-bgp-neighbor-af)# enable
esr-R3(config-bgp-neighbor-af)# exit
esr-R3(config-bgp-neighbor)# exit
```

R1 eBGP:

```
esr-R3(config-bgp)# neighbor 185.0.0.2
esr-R3(config-bgp-neighbor)# remote-as 20
esr-R3(config-bgp-neighbor)# enable
```

ipv4-, route-map:

```
esr-R3(config-bgp-neighbor)# address-family ipv4 unicast
esr-R3(config-bgp-neighbor-af)# route-map bgp-general out
esr-R3(config-bgp-neighbor-af)# enable
esr-R3(config-bgp-neighbor-af)# exit
esr-R3(config-bgp-neighbor)# exit
```

:

```
esr-R3(config-bgp)# enable
esr-R3(config-bgp)# exit
```

BGP- :

```
esr# show bgp neighbors
```

BGP :

```
esr# show bgp ipv4 unicast
```

BGP

BGP, , . , , .

ECMP (router bgp maximum-paths ..), 16 .

BGP .

BGP:

address family: unicast IPv4, unicast IPv6, VPNv4 unicast, VPLS.

VPNv4 :

RD. , VRF, RT.

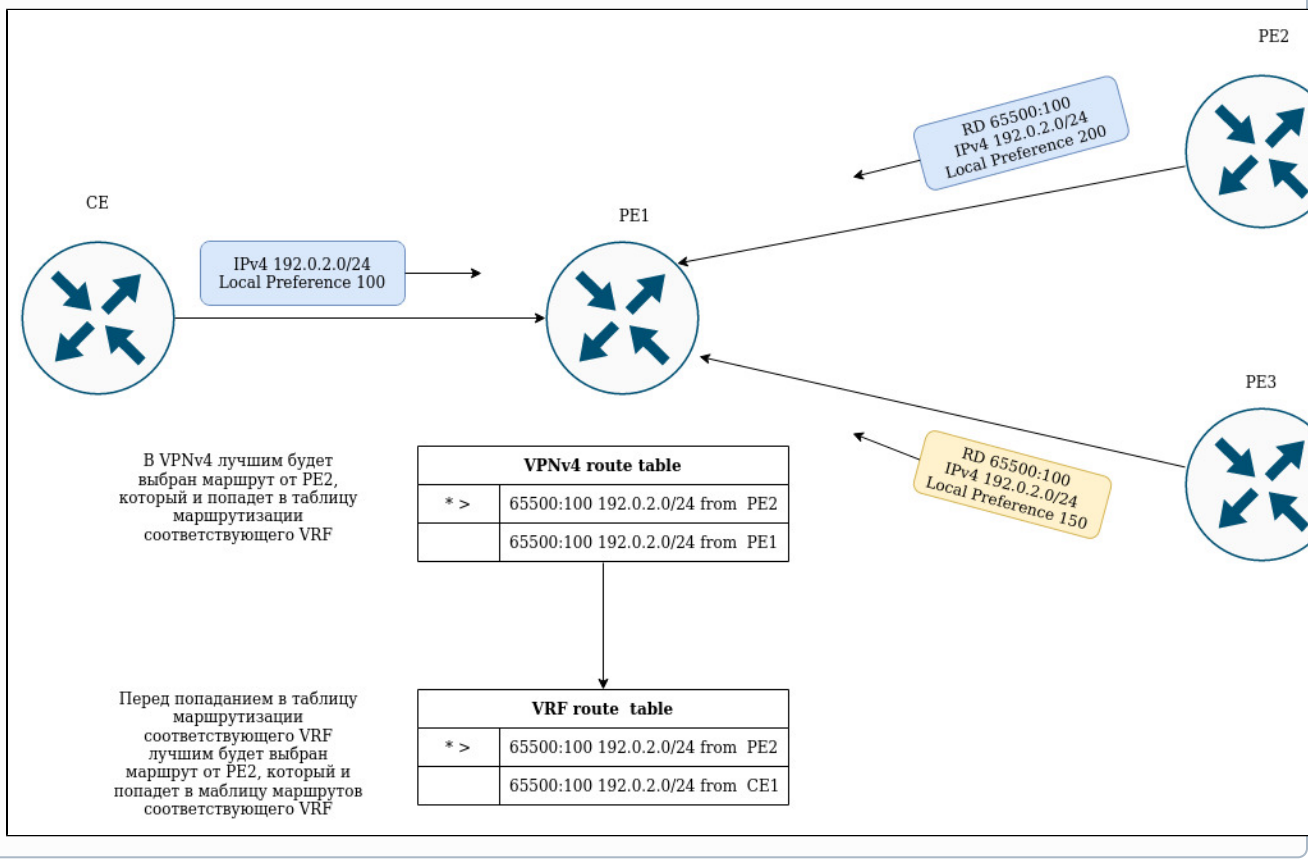

, next-hop'a . Next-hop , connected-.

1. , "stale", , . "stale" LLGR ();
2. Weight – , ;
3. Local preferences – , ;
4. AS-path – "" ;
5. Origin – Incomplete . EGP , IGP;
6. multiple exit discriminator (MED) – ;
7. , EBGP , , IBGP ;
8. Router-Id – , BGP- Router-Id, ;
9. Cluster list – , ;
10. BGP- – , BGP- .

BFD

BFD (Bidirectional Forwarding Detection) — , , 50 . BFD , .. (BFD- -).

1	BFD OSPF	**esr(config-if-gi)# ip ospf bfd-enable**	
2	BFD BGP neighbor	**esr(config-bgp-neighbor)# bfd-enable**	
3	, BFD- . ( )	**esr(config)# ip bfd idle-tx-interval <TIMEOUT>**	<TIMEOUT> – , BFD-, [200..65535] ESR-1000/1200 /1500/1511 /1700/3100 [300..65535] ESR-10/12V(F)/14VF/20/21/100/200 1
4	BFD- ( )	**esr(config)# ip bfd log-adjacency-changes**	

5	, BFD-. ( )	**esr(config)# ip bfd min-rx-interval <TIMEOUT>**	<TIMEOUT> – , BFD- , [200..65535] ESR-1000/1200 /1500/1511 /1700/3100 [300..65535] ESR-10/12V(F)/14VF/20/21/100/200 : • 300 ESR-10/12V(F)/14VF/20/21/100/200 • 200 ESR-1000/1200/1500 /1511/1700/3100
6	, BFD- . ( )	**esr(config)# ip bfd min-tx-interval <TIMEOUT>**	<TIMEOUT> – , BFD- , [200..65535] ESR-1000/1200 /1500/1511 /1700/3100 [300..65535] ESR-10/12V(F)/14VF/20/21/100/200 : • 300 ESR-10/12V(F)/14VF/20/21/100/200 • 200 ESR-1000/1200/1500 /1511/1700/3100
7	, BFD- .	**esr(config)# ip bfd multiplier <COUNT>**	<COUNT> – , , [1..100]. : 5
8	BFD IP-.	**esr(config)# ip bfd neighbor <ADDR> [{ interface <IF> | tunnel <TUN> }] [local-address <ADDR> [multihop]] [vrf <VRF>]**	<ADDR> – IP- , AAA.BBB.CCC.DDD, [0..255]; <IF> – ; <TUN> – ; <VRF> – VRF, 31 ; multihop – TTL=255, BFD .
9	BFD- , BFD- , BFD-. ( )	**esr(config)# ip bfd passive**	
10	, BFD- . ( )	**esr(config-if-gi)# ip bfd idle-tx-interval <TIMEOUT>**	<TIMEOUT> – , BFD-, [200..65535] ESR-1000/1200 /1500/1511 /1700/3100 [300..65535] ESR-10/12V(F)/14VF/20/21/100 /200. : 1
11	, BFD-. ( )	**esr(config-if-gi)# ip bfd min-rx-interval <TIMEOUT>**	<TIMEOUT> – , BFD- , [200..65535] ESR-1000/1200 /1500/1511 /1700/3100 [300..65535] ESR-10/12V(F)/14VF/20/21/100/200 : • 300 ESR-10/12V(F)/14VF/20/21/100/200 • 200 ESR-1000/1200/1500 /1511/1700/3100
12	, BFD- . ( )	**esr(config-if-gi)# ip bfd min-tx-interval <TIMEOUT>**	<TIMEOUT> – , BFD- , [200..65535] ESR-1000/1200 /1500/1511 /1700/3100 [300..65535] ESR-10/12V(F)/14VF/20/21/100/200 : • 300 ESR-10/12V(F)/14VF/20/21/100/200 • 200 ESR-1000/1200/1500 /1511/1700/3100
13	, BFD- . ( )	**esr(config-if-gi)# ip bfd multiplier <COUNT>**	<COUNT> – , , [1..100]. : 5
14	BFD- , BFD- , BFD-. ( )	**esr(config-if-gi)# ip bfd passive**	

BFD c BGP

:

eBGP ESR R1 R2 BFD.

:

1. R1
   Gi1/0/1:

```
esr(config)# interface gigabitethernet 1/0/1
esr(config-if-gi)# ip firewall disable
esr(config-if-gi)# ip address 10.0.0.1/24
```

eBGP BFD:

```
esr(config)# router bgp 100
esr(config-bgp)# neighbor 10.0.0.2
esr(config-bgp-neighbor)# remote-as 200
esr(config-bgp-neighbor)# update-source 10.0.0.1
esr(config-bgp-neighbor)# bfd-enable
esr(config-bgp-neighbor)# enable
esr(config-bgp-neighbor)# exit
esr(config-bgp)# enable
esr(config-bgp)# exit
```

2. R2

   Gi1/0/1:

```
esr(config)# interface gigabitethernet 1/0/1
esr(config-if-gi)# ip firewall disable
esr(config-if-gi)# ip address 10.0.0.2/24
```

eBGP BFD:

```
esr(config)# router bgp 200
esr(config-bgp)# neighbor 10.0.0.1
esr(config-bgp-neighbor)# remote-as 100
esr(config-bgp-neighbor)# update-source 10.0.0.2
esr(config-bgp-neighbor)# bfd-enable
esr(config-bgp-neighbor)# enable
esr(config-bgp-neighbor)# exit
esr(config-bgp)# enable
esr(config-bgp)# exit
```

PBR

Route-map BGP

Route-map , . , (MED, AS-PATH, community, LocalPreference) .

Route-map (ACL).

1	IP-.	**esr(config)# route-map <NAME>**	<NAME> – , 31 .
2	.	**esr(config-route-map)# rule <ORDER>**	<ORDER> – , [1 .. 10000].

3	, .	**esr(config-route-map-rule)# action <ACT>**	<ACT> – : • **permit** – ; • **deny** – .
4	BGPAS-Path , ( ).	**esr(config-route-map-rule)# match as-path [begin | end | contain] <AS-PATH>**	<AS-PATH> – , AS,AS,AS, [1..4294967295]. : • **begin** – AS; • **end** – AS; • **contain** – AS.
5	BGPCommunity, ( ).	**esr(config-route-map-rule)# match community <COMMUNITY-LIST>**	<COMMUNITY-LIST> – community, AS:N,AS:N, [1.. 4294967295]. 64 community.
6	BGPExtendedCommunity, ( ).	**esr(config-route-map-rule)# match extcommunity <EXTCOMMUNITY-LIST>**	<EXTCOMMUNITY-LIST> – extcommunity, KIND:AS:N, KIND: AS:N, KIND – extcommunity: • **rt** (Route Target); • **ro** (Route Origin); N – extcommunity, [1..65535].
7	IP-, ( ).	**esr(config-route-map-rule)# match ip address object-group <OBJ-GROUP-NETWORK-NAME>** **esr(config-route-map-rule)# match ipv6 address object-group <OBJ-GROUP-NETWORK-NAME>**	<OBJ-GROUP-NETWORK-NAME> – IP-, , 31 .
8	IP-, BGPNext-Hop ( ).	**esr(config-route-map-rule)# match ip next-hop object-group <OBJ-GROUP-NETWORK-NAME>** **esr(config-route-map-rule)# match ipv6 next-hop object-group <OBJ-GROUP-NETWORK-NAME>**	<OBJ-GROUP-NETWORK-NAME> – IP-, , 31 .
9	, IP- , , ( ).	**esr(config-route-map-rule)# match ip route-source object-group <OBJ-GROUP-NETWORK-NAME>** **esr(config-route-map-rule)# match ipv6 route-source object-group <OBJ-GROUP-NETWORK-NAME>**	<OBJ-GROUP-NETWORK-NAME> – IP-, , 31 .
10	ACL , .	**esr(config-route-map-rule)# match access-group <NAME>**	<NAME> – , 31 .
11	BGP MED ( ).	**esr(config-route-map-rule)# match metric bgp <METRIC>**	<METRIC> – BGPMED, [0..4294967295].
12	OSPF Metric , .	**esr(config-route-map-rule)# match metric ospf <TYPE> <METRIC>**	<TYPE> – OSPF Metric, type-1 type-2; <METRIC> – OSPF Metric, [0..65535].
13	RIP Metric , .	**esr(config-route-map-rule)# match metric rip <METRIC>**	<METRIC> – RIP Metric, [0..16].
14	OSPF Tag , .	**esr(config-route-map-rule)# match tag ospf <TAG>**	<TAG> – OSPF Tag, [0..4294967295].
15	RIP Tag , .	**esr(config-route-map-rule)# match tag rip <TAG>**	<RIP> – RIP Tag, [0..65535].
16	BGP AS-Path, AS-Path ( ).	**esr(config-route-map-rule)# action set as-path prepend <AS-PATH> {track <TRACK-ID>}**	<AS-PATH> – , . AS,AS,AS, [1..4294967295]. <TCACK-ID> – vrrp-tracking, . [1..60].
17	BGP Community, ( )	**esr(config-route-map-rule)# action set community {COMMUNITY-LIST> | no-advertise | no-export }**	<COMMUNITY-LIST> – community, AS:N,AS:N, [1..65535]; • **no - advertise** – , community, BGP-; • **no - export** – , community, eBGP-, .
18	BGP ExtCommunity, ( ).	**esr(config-route-map-rule)# action set extcommunity <EXTCOMMUNITY-LIST>**	<EXTCOMMUNITY-LIST> – extcommunity, KIND:AS:N, KIND: AS:N, KIND – extcommunity: • **rt** (Route Target); • **ro** (Route Origin); N – extcommunity, [1..65535].
19	BGP Next-Hop, ( ).	**esr(config-route-map-rule)# action set ip bgp-next-hop <ADDR>** **esr(config-route-map-rule)# action set ipv6 bgp-next-hop <IPV6-ADDR>**	<ADDR> – IP- , AAA.BBB.CCC.DDD, [0..255]. <IPV6-ADDR> – IPv6- , X:X:X:X::X, [0..FFFF].

20	Next-Hop, , BGP ( ).	**esr(config-route-map-rule)# action set ip next-hop {NEXTHOP> | blackhole | unreachable | prohibit}**	<NEXTHOP> – IP- AAA.BBB.CCC.DDD, [0..255]; • **blackhole** – ; • **unreachable** – , ICMP Destination unreachable (Host unreachable, code 1); • **prohibit** – , ICMPDestinationunreachable (Communication administratively prohibited code 13).
		esr(config-route-map-rule)# action set ipv6 next-hop <IPV6-NEXTHOP>	<IPV6-NEXTHOP> – IPv6- , X:X:X:X::X, [0..FFFF].
21	BGP Local Preference, ( ).	**esr(config-route-map-rule)# action set local-preference <PREFERENCE>**	<PREFERENCE> – BGP Local Preference, [0..255].
22	BGP Origin, ( ).	**esr(config-route-map-rule)# action set origin <ORIGIN>**	<ORIGIN> – BGP Origin: • **egp** – EGP; • **igp** – AS; • **incomplete** – .
23	BGP MED, ( ).	**esr(config-route-map-rule)# action set metric bgp <METRIC>**	<METRIC> – BGP MED, [0..4294967295].
24	.	**esr(config-bgp-neighbor)# route-map <NAME><DIRECTION>**	<NAME> – ; <DIRECTION> – : • **in** – ; • **out** – .
		esr(config-ipv6-bgp-neighbor)# route-map <NAME><DIRECTION>	

1. Route-map BGP

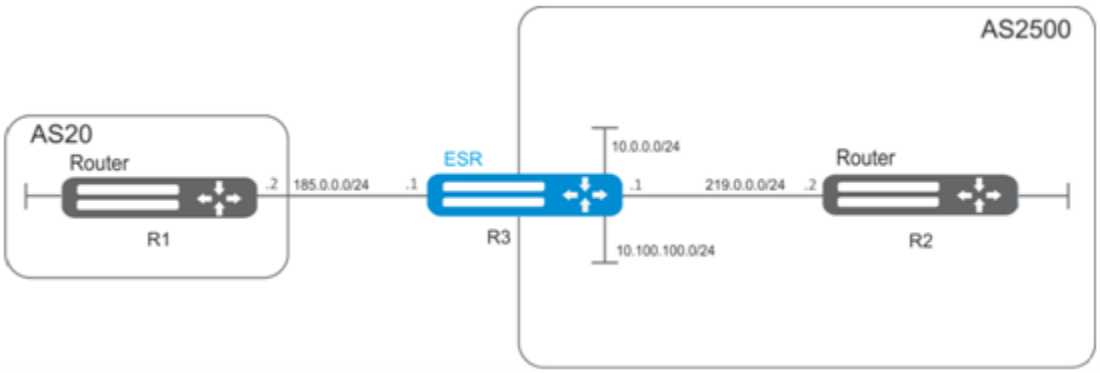

:

ommunity , AS 20:

:

- BGP c AS 2500 ESR;
- AS20.

:

:

```
esr# configure
esr(config)# route-map from-as20
```

1:

```
esr(config-route-map)# rule 1
```

AS PATH AS 20, ommunity 20:2020 :

```
esr(config-route-map-rule)# match as-path contain 20
esr(config-route-map-rule)# action set community 20:2020
esr(config-route-map-rule)# exit
esr(config-route-map)# exit
```

BGP AS 2500 :

```
esr(config)# router bgp 2500
esr(config-bgp)# neighbor 185.0.0.2
esr(config-bgp-neighbor)# address-family ipv4 unicast
```

:

```
esr(config-bgp-neighbor-af)# route-map from-as20 in
```

2. Route-map BGP

:

(community 2500:25) MED, 240, EGP:

:

BGP c AS 2500 ESR

:

:

```
esr(config)# route-map to-as20
```

:

```
esr(config-route-map)# rule 1
```

community 2500:25, MED 240 Origin EGP:

```
esr(config-route-map-rule)# match community 2500:25
esr(config-route-map-rule)# action set metric bgp 240
esr(config-route-map-rule)# action set origin egp
esr(config-route-map-rule)# exit
esr(config-route-map)# exit
```

BGP AS 2500 :

```
esr(config)# router bgp 2500
esr(config-bgp)# neighbor 185.0.0.2
esr(config-bgp-neighbor-af)# address-family ipv4 unicast
```

:

```
esr(config-bgp-neighbor-af)# route-map to-as20 out
esr(config-bgp-neighbor-af)# exit
esr(config-bgp-neighbor)# exit
esr(config-bgp)# exit
```

Route-map (Policy-based routing)

1	C IP-.	**esr(config)# route-map <NAME>**	<NAME> – , 31 .
2		**esr(c onfig-route-map)# rule <ORDER>**	<ORDER> – , [1 .. 10000].
3	, .	**esr(config-route-map-rule)# action <ACT>**	<ACT> – : • **permit** – ; • **deny** – .
4	ACL, ( ).	**esr(config-route-map-rule)# match ip access-group <NAME>**	<NAME> – , 31 .
5	Next-Hop , (ACL) ( ).	**esr(config-route-map-rule)# action set ip next-hop verify-availability <NEXTHOP><METRIC>**	<NEXTHOP> – IP- AAA.BBB.CCC.DDD, [0..255]; <METRIC> – , [0..255].
6	(ACL).	**esr(config-if-gi)# ip policy route-map <NAME>**	<NAME> – , 31 .

Route-map (Policy-based routing)

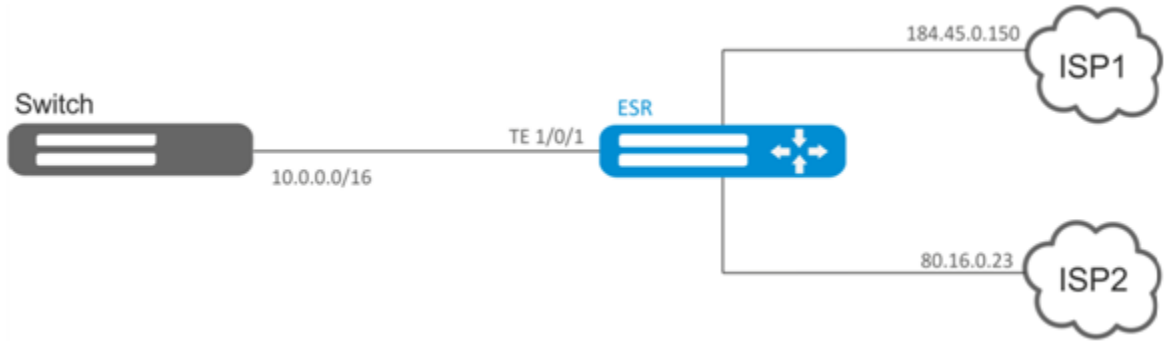

:

.

IP- .

10.0.20.0/24 ISP1 (184.45.0.150), 10.0.30.0/24 – ISP2 (80.16.0.23). (ISP), .

:

ACL:

```
esr# configure
esr(config)# ip access-list extended sub20
esr(config-acl)# rule 1
esr(config-acl-rule)# match source-address 10.0.20.0 255.255.255.0
esr(config-acl-rule)# match destination-address any
esr(config-acl-rule)# match protocol any
esr(config-acl-rule)# action permit
esr(config-acl-rule)# enable
esr(config-acl-rule)# exit
esr(config-acl)# exit
esr(config)# ip access-list extended sub30
esr(config-acl)# rule 1
esr(config-acl-rule)# match source-address 10.0.30.0 255.255.255.0
esr(config-acl-rule)# match destination-address any
esr(config-acl-rule)# match protocol any
esr(config-acl-rule)# action permit
esr(config-acl-rule)# enable
esr(config-acl-rule)# exit
esr(config-acl)# exit
```

:

```
esr(config)# route-map PBR
```

1:

```
esr(config-route-map)# rule 1
```

(ACL) :

```
esr(config-route-map-rule)# match ip access-group sub20
```

next-hop sub20:

```
esr(config-route-map-rule)# action set ip next-hop verify-availability 184.45.0.150 10
esr(config-route-map-rule)# action set ip next-hop verify-availability 80.16.0.23 30
esr(config-route-map-rule)# exit
esr(config-route-map)# exit
```

1 10.0.20.0/24 184.45.0.150, – 80.16.0.23. – 10 30.

2:

```
esr(config-route-map)# rule 2
```

(ACL) :

```
esr(config-route-map-rule)# match ip access-group sub30
```

nexthop sub30 :

```
esr(config-route-map-rule)# action set ip next-hop verify-availability 80.16.0.23 10
esr(config-route-map-rule)# action set ip next-hop verify-availability 184.45.0.150 30
esr(config-route-map-rule)# exit
esr(config-route-map)# exit
```

2 10.0.30.0/24 80.16.0.23, – 184.45.0.150. .

TE 1/0/1:

```
esr(config)# interface tengigabitethernet 1/0/1
```

:

```
esr(config-if-te)# ip policy route-map PBR
```

VRF Lite

VRF (Virtual Routing and Forwarding) — , , (,).

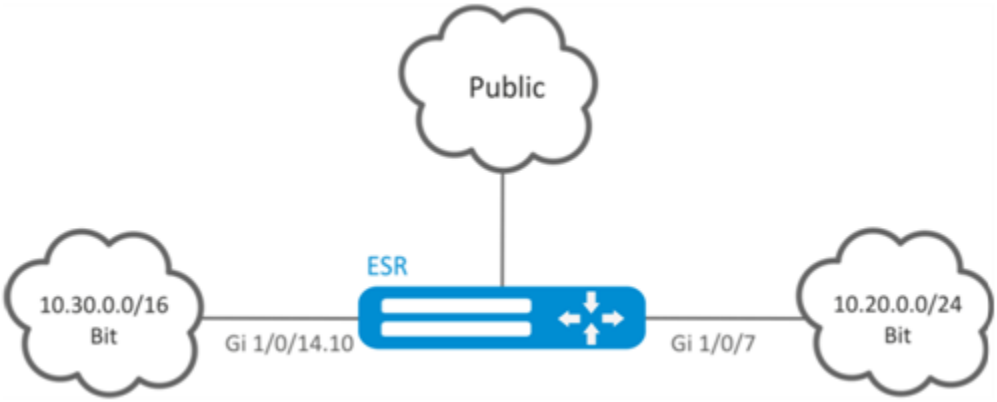

1	VRF VRF.	**esr(config)# ip vrf <VRF>**	<VRF> – VRF, 31 .
2	VRF.	**esr(config-vrf)# description <DESCRIPTION>**	<DESCRIPTION> – VRF, 255 .
3	VRF IPv4/IPv6 ( ).	**esr(config-vrf)# ip protocols <PROTOCOL> max-routes <VALUE>** **esr(config-vrf)#ipv6 protocols <PROTOCOL> max-routes <VALUE>**	<PROTOCOL> – , : ospf, bgp; <VALUE> – , : • OSPF ESR-1000/1200/1500 /1511/1700/3100 – [1..500000], ESR-20/21/100/200 – [1..300000], ESR-10/12V(F)/14VF – [1..30000] • BGP ESR-1000/1200/1500 /1511/1700/3100 – [1..5000000], ESR-20/21/100/200 – [1.. 2500000], ESR-10/12V(F)/14VF – [1..1000000]. : 0
4	(Static/OSPF/BGP/IS-IS) VRF ( ). . , OSPF BGP.		
5	/ , , DNAT/SNAT, DAS- SNMPv3 VRF ( ).	**esr(config-snat-ruleset)# ip vrf forwarding <VRF>**	<VRF> – VRF, 31 .
6	LT- VRF ( ).		. LT-

:

ESR 2 , .

:

VRF:

```
esr(config)# ip vrf bit
esr(config-vrf)# exit
```

:

```
esr(config)# security zone vrf-sec
esr(config-zone)# ip vrf forwarding bit
esr(config-zone)# exit
```

TCP/UDP-:

```
esr(config)# security zone-pair vrf-sec vrf-sec
esr(config-zone-pair)# rule 1
esr(config-zone-rule)# match source-address any
esr(config-zone-rule)# match destination-address any
esr(config-zone-rule)# match protocol udp
esr(config-zone-rule)# match source-port any
esr(config-zone-rule)# match destination-port any
esr(config-zone-rule)# action permit
esr(config-zone-rule)# enable
esr(config-zone-rule)# exit
esr(config-zone-pair)# rule 2
esr(config-zone-rule)# match source-address any
esr(config-zone-rule)# match destination-address any
esr(config-zone-rule)# match protocol tcp
esr(config-zone-rule)# match source-port any
esr(config-zone-rule)# match destination-port any
esr(config-zone-rule)# action permit
esr(config-zone-rule)# enable
esr(config-zone-rule)# exit
```

, IP-, :

```
esr(config)# interface gigabitethernet 1/0/7
esr(config-if-gi)# ip vrf forwarding bit
esr(config-if-gi)# ip address 10.20.0.1/24
esr(config-if-gi)# security-zone vrf-sec
esr(config-if-gi)# exit
esr(config)# interface gigabitethernet 1/0/14.10
esr(config-subif)# ip vrf forwarding bit
esr(config-subif)# ip address 10.30.0.1/16
esr(config-subif)# security-zone vrf-sec
esr(config-subif)# exit
esr(config)# exit
```

, VRF, :

```
esr# show ip vrf
```

VRF :

```
esr# show ip route vrf bit
```

MultiWAN

MultiWAN , .

1	, MultiWAN: IP- security-zone.		

2	WAN ( ).	**esr(config)# ip route <SUBNET> wan load-balance rule <ID> [<METRIC>]**	<ID> – .2. [METRIC] – , [0..255].
3	WAN .	**esr(config)# wan load-balance rule <ID>**	<ID> – , [1..50].
4	, , MultiWAN.	**esr(config-wan-rule)# outbound { interface <IF> | tunnel <TUN> } [WEIGHT]**	<IF>– ; <TUN> – ; [WEIGHT] – , [1..255]. 2, 2 , . . 1.
5	( ).	**esr(config-wan-rule)# description <DESCRIPTION>**	<DESCRIPTION> – wan, 255 .
6	( ).	**esr(config-wan-rule)# failover**	
7	wan .	**esr(config-wan-rule)# enable**	
8	IP- .	**esr(config)# wan load-balance target-list <NAME>**	<NAME> – , 31 .
9	.	**esr(config-target-list)# target <ID>**	<ID> – , [1..50]. «all», .
10	target ( ).	**esr(config-wan-target)# description <DESCRIPTION>**	<DESCRIPTION> – target, 255 .
11	ICMP ( ).	**esr(config-wan-target)# resp-time <TIME>**	<TIME> – , [1..30].
12	IP- .	**esr(config-wan-target)# ip address <ADDR>**	<ADDR> – IP- , AAA.BBB.CCC.DDD, [0..255].
		esr(config-wan-target)# ipv6 address <IPV6-ADDR>	<IPV6-ADDR> – IPv6- , X:X:X:X::X, [0..FFFF].
13	.	**esr(config-wan-target)# enable**	
14-17 / MultiWAN			
14	WAN IPv4/IPv6 .	**esr(config-if-gi)# wan load-balance enable**	
		esr(config-if-gi)# ipv6 wan load-balance enable	
15	, , , ( ).	**esr(config-if-gi)# wan load-balance failure-count <VALUE>**	<VALUE> – , [1..10]. 1.
		esr(config-if-gi)# ipv6 wan load-balance failure-count <VALUE>	
16	, , , ( ).	**esr(config-if-gi)# wan load-balance success-count <VALUE>**	<VALUE> – , [1..10]. 1.
		esr(config-if-gi)# ipv6 wan load-balance success-count <VALUE>	
17	IP- , , MultiWAN.	**esr(config-if-gi)# wan load-balance nexthop { <IP> | dhcp enable | tunnel enable }**	<IP> – IP- (), AAA.BBB.CCC.DDD, [0..255]. dhcp enable – IP- DHCP-, DHCP-. tunnel enable – nexthop – p-t-p . ppp.
		esr(config-if-gi)# ipv6 wan load-balance nexthop { <IPV6> }	<IPV6> – IPv6- (), X:X:X:X::X, [0..FFFF].
18	IP- . ( )/ (chack-all) , .	**esr(config-if-gi)# wan load-balance target-list { check-all | <NAME> }**	<NAME> – target (.7). check-all – target .
		esr(config-if-gi)# ipv6 wan load-balance target-list { check-all | <NAME> }	
19	WAN.	**esr(config)# ip route <SUBNET> wan load-balance rule <ID> [<METRIC>]**	<ID> – .2. [METRIC] – , [0..255].
		esr(config)# ipv6 route <SUBNET> wan load-balance rule <ID [<METRIC>]	

:

(108.16.0.1/28) .

:

:

- te1/0/1 te1/0/2;
- IP- te1/0/1 te1/0/2.

:

:

```
esr(config)# ip route 108.16.0.0/28 wan load-balance rule 1
```

WAN:

```
sr(config)# wan load-balance rule 1
```

:

```
sr(config-wan-rule)# outbound interface tengigabitethernet 1/0/2
sr(config-wan-rule)# outbound interface tengigabitethernet 1/0/1
```

:

```
sr(config-wan-rule)# enable
sr(config-wan-rule)# exit
```

:

```
sr(config)# wan load-balance target-list google
```

:

```
esr(config-target-list)# target 1
```

, :

```
sr(config-wan-target)# ip address 8.8.8.8
sr(config-wan-target)# enable
sr(config-wan-target)# exit
```

. te1/0/1 nexthop:

```
sr(config)# interface tengigabitethernet 1/0/1
sr(config-if)# wan load-balance nexthop 203.0.0.1
```

te1/0/1 :

```
sr(config-if)# wan load-balance target-list google
```

te1/0/1 WAN- :

```
sr(config-if)# wan load-balance enable
sr(config-if)# exit
```

te1/0/2 nexthop:

```
sr(config)# interface tengigabitethernet 1/0/2
sr(config-if)# wan load-balance nexthop 65.6.0.1
```

te1/0/2 :

```
sr(config-if)# wan load-balance target-list google
```

te1/0/2 WAN- :

```
sr(config-if)# wan load-balance enable
sr(config-if)# exit
```

:

WAN:

```
sr(config)# wan load-balance rule 1
```

MultiWAN , . :

```
sr(config-wan-rule)# failover
```

IS-IS

IS-IS — , ISO, (link-state). , , . IS-IS OSI, .

1	C IS-IS .	**esr(config)# router isis <ID> [vrf <VRF>]**	<ID> – , [1..65535]; <VRF> – VRF, 31 .
2	NET-.	**esr(config-isis)# net {<NET>}**	<NET> – NET , : ff[.ffff.ffff.ffff.ffff.ffff.ffff].ffff.ffff.ffff.00.
3	IS-IS .	**esr(config-isis)# enable**	
4	L2- ( ).	**esr(config-isis)# authentication domain algorithm <ALGORITHM>**	<ALGORITHM> – : • cleartext – , ; • md5 – md5.
5	L2- ( ).	**esr(config-isis)# authentication domain key ascii-text { <CLEAR-TEXT> | encrypted <ENCRYPTED-TEXT> }**	<CLEAR-TEXT> – , 8 ; <ENCRYPTED-TEXT> – 8 (16) (0xYYYY...) (YYYY...).
6	( ).	**esr(config-isis)# authentication domain key chain <KEYCHAIN>**	<KEYCHAIN> – , 16 .

7	L1- ( ).	**esr(config-isis)# authentication area algorithm <ALGORITHM>**	<ALGORITHM> – : • cleartext – , ; • md5 – md5.
8	L1- ( ).	**esr(config-isis)# authentication area key ascii-text { <CLEAR-TEXT> | encrypted <ENCRYPTED-TEXT> }**	<CLEAR-TEXT> – , 8 ; <ENCRYPTED-TEXT> – 8 (16) (0xYYYY...) (YYYY...).
9	( ).	**esr(config-isis)# authentication area key chain <KEYCHAIN>**	<KEYCHAIN> – , 16 .
10	LSP ( ).	**esr(config-isis)# hostname dynamic**	
11	IS-IS ( ).	**esr(config-isis)# is-type {<LEVEL>}**	<LEVEL> - IS-IS: • level-1 – 1 ; • level-1-2 – 1, 2 ; • level-2 – 2 .
12	, IS-IS ( ).	**esr(config-isis)# metric-style { narrow | wide | transition } [<LEVEL>]**	narrow — TLV ( ) ; wide — TLV ( ) ; transition — TLV ( ) ; <LEVEL> — IS-IS: • level-1 – 1 ; • level-2 – 2 .
13	IS-IS ( ).	**esr(config-isis)# preference {<VALUE>}**	<VALUE> – [1..255].
14	IS-IS IPv4 / IPv6 ( ).	**esr(config-isis)# address-family { ipv4 | ipv6 }**	ipv4 - IPv4; ipv6 - IPv6.
15	LSP ( ).	**esr(config-isis)# lsp-refresh-interval { min | max } <TIME> [<LEVEL>]**	min — /; max — /; <TIME> — , [1..65535]; <LEVEL> — IS-IS: • level-1 – 1 ; • level-2 – 2 .
16	LSP ( ).	**esr(config-isis)# max-lsp-lifetime <TIME> [<LEVEL>]**	<TIME> – , [1..65535]; <LEVEL> - IS-IS: • level-1 – 1 ; • level-2 – 2 .
17	SPF ( ).	**esr(config-isis)# spf-timeout <TIME> [<LEVEL>]**	<TIME> — , [1..10000]; <LEVEL> — IS-IS: • level-1 – 1 ; • level-2 – 2 .
18	, ( ).	**esr(config-isis)# redistribute bgp <AS> [route-map <NAME>] [is-type <LEVEL>]**	<AS> – , [1..4294967295]; <NAME> – , , 31 ; <LEVEL> — IS-IS: • level-1 – 1 ; • level-2 – 2 .
		esr(config-isis)# redistribute ipv6 bgp <AS> [route-map <NAME>] [is-type <LEVEL>]	
		esr(config-isis)# redistribute ospf <ID> <ROUTE-TYPE> [route-map <NAME>] [is-type <LEVEL>]	<ID> – , [1..65535]; <ROUTE-TYPE> – : • intra-area – OSPF- ; • inter-area – OSPF- ; • external1 – OSPF- 1; • external2 – OSPF- 2; <NAME> – , OSPF-, 31 ; <LEVEL> — IS-IS:

		esr(config-isis)# redistribute ipv6 ospf <ID> <ROUTE-TYPE> [route-map <NAME>] [is-type <LEVEL>]	• level-1 – 1 ; • level-2 – 2 .
		esr(config-isis)# redistribute isis <ID> <ROUTE-TYPE> [route-map <NAME>] [is-type <LEVEL>]	<ID> – , [1..65535]; <ROUTE-TYPE> – : • level-1 – 1 ; • level-2 – 1 ; • inter-area – IS-IS- ; <NAME> – , IS-IS-, 31 ; <LEVEL> — IS-IS: • level-1 – 1 ; • level-2 – 2 .
		esr(config-isis)# redistribute rip [route-map <NAME>] [is-type <LEVEL>]	<NAME> – , RIP-, 31 ; <LEVEL> — IS-IS: • level-1 – 1 ; • level-2 – 2 .
		esr(config-isis)# redistribute static [route-map <NAME>] [is-type <LEVEL>]	<NAME> – , , 31 ; <LEVEL> — IS-IS: • level-1 – 1 ; • level-2 – 2 .
		esr(config-isis)# redistribute connected [route-map <NAME>] [is-type <LEVEL>]	<NAME> – , , 31 ; <LEVEL> — IS-IS: • level-1 – 1 ; • level-2 – 2 .
19	( ).	**esr(config-isis)# prefix-list { ipv6 <LIST_NAME> | <LIST_NAME> } {in|out}**	<LIST-NAME> – , 31 . in – ; out – .
20	( ).	**esr(config-isis)# route-map <NAME> {in|out}**	<NAME> – , , 31 .
21	IS-IS .	**esr(config-if-gi)# isis instance <ID>**	<ID> – , [1..65535].
22	IS-IS .	**esr(config-if-gi)# isis enable**	
23	TLV#8 hello- ( ).	**esr(config-if-gi)# isis hello-padding**	
24	DIS ( ).	**esr(config-if-gi)# isis priority <VALUE> [<LEVEL>]**	<VALUE> – , [0..127]; <LEVEL> - IS-IS: • level-1 – 1 ; • level-2 – 2 .
25	a ( ).	**esr(config-if-gi)# isis metric <VALUE> [<LEVEL>]**	<VALUE> – , [1..16777215]; <LEVEL> - IS-IS: • level-1 – 1 ; • level-2 – 2 .
26	IS-IS ( ).	**esr(config-if-gi)# isis circuit-type {<LEVEL>}**	<LEVEL> - IS-IS: • level-1 – 1 ; • level-1-2 – 1, 2 ; • level-2 – 2 .
27	hello- ( ).	**esr(config-if-gi)# isis hello-interval <TIME> [<LEVEL>]**	<TIME> – , [1..65535]; <LEVEL> - IS-IS: • level-1 – 1 ; • level-2 – 2 .

28	Hold Time ( ).	**esr(config-if-gi)# isis hello-multiplier <VALUE> [<LEVEL>]**	<VALUE> – , [3..1000]; <LEVEL> - IS-IS: • level-1 – 1 ; • level-2 – 2 .
29	point-to-point IS-IS ( ).	**esr(config-if-gi)# isis network point-to-point**	
30	CSNP ( ).	**esr(config-if-gi)# isis csnp-interval <TIME> [<LEVEL>]**	<TIME> – , [1..65535]; <LEVEL> - IS-IS: • level-1 – 1 ; • level-2 – 2 .
31	PSNP ( ).	**esr(config-if-gi)# isis psnp-interval <TIME> [<LEVEL>]**	<TIME> – , [1..65535]; <LEVEL> - IS-IS: • level-1 – 1 ; • level-2 – 2 .
32	LSP Broadcast- ( ).	**esr(config-if-gi)# isis lsp-interval <TIME> [<LEVEL>]**	<TIME> – , [1-10000]; <LEVEL> - IS-IS: • level-1 – 1 ; • level-2 – 2 .
33	LSP PtP- ( ).	**esr(config-if-gi)# isis lsp-retransmit-interval <TIME> [<LEVEL>]**	<TIME> – , [1..65535]; <LEVEL> - IS-IS: • level-1 – 1 ; • level-2 – 2 .
34	hello- ( ).	**esr(config-if-gi)# isis authentication algorithm <ALGORITHM> [<LEVEL>]**	<ALGORITHM> – : • cleartext – , ; • md5 – md5; <LEVEL> – IS-IS: • level-1 – 1 ; • level-2 – 2 .
35	hello- ( ).	**esr(config-if-gi)# isis authentication key ascii-text { <CLEAR-TEXT> | encrypted <ENCRYPTED-TEXT> } [<LEVEL>]**	<CLEAR-TEXT> – , 8 ; <ENCRYPTED-TEXT> – 8 (16) (0xYYYY...) (YYYY...); <LEVEL> – IS-IS: • level-1 – 1 ; • level-2 – 2 .
36	hello- ( ).	**esr(config-if-gi)# isis authentication key chain <KEYCHAIN> [<LEVEL>]**	<KEYCHAIN> – , 16 ; <LEVEL> – IS-IS: • level-1 – 1 ; • level-2 – 2 .

:

IS-IS . ESR1 L1-only, ESR2 - L1/L2, ESR3 - L2-only, area.

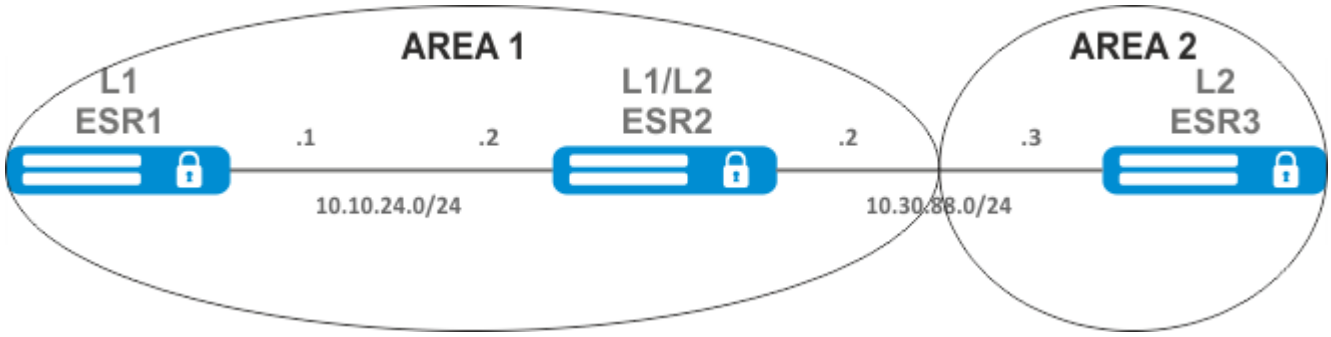

:

IP- , .

ESR1. IS-IS 1 :

```
ESR1(config)# router isis 1
```

, :

```
ESR1(config-isis)# net 49.0001.1111.1111.1111.00
```

IS-IS:

```
ESR1(config-isis)# is-type level-1
```

:

```
ESR1(config-isis)# metric-style narrow level-1
```

IS-IS :

```
ESR1(config-isis)# enable
```

. IS-IS, :

```
ESR1(config-if-gi)# isis instance 1
ESR1(config-if-gi)# isis enable
```

ESR2:

```
ESR2(config)# router isis 2
```

, ESR1, :

```
ESR2(config-isis)# net 49.0001.2222.2222.2222.00
```

, IS-IS:

```
ESR2(config-isis)# metric-style narrow level-1
ESR2(config-isis)# metric-style wide level-2
ESR2(config-isis)# enable
```

. :

```
ESR2(config-if-gi)# isis instance 2
ESR2(config-if-gi)# isis enable
```

ESR3:

```
ESR3(config)# router isis 3
ESR3(config-isis)# net 49.0002.3333.3333.3333.00
ESR3(config-isis)# is-type level-2
ESR3(config-isis)# metric-style wide level-2
ESR3(config-isis)# enable
ESR3(config-if-gi)# isis instance 3
ESR3(config-if-gi)# isis enable
```

show isis neighbors. ESR2:

```
ESR2# show isis neighbors
IS-IS 2
IS-IS Level 1 Neighbors
System ID                Hostname          Interface         State         Holdtime  SNPA
1111.1111.1111  ESR1                      gi1/0/2            Up              25                  a8f9.4baa.1d42
IS-IS Level 2 Neighbors
System ID               Hostname          Interface         State         Holdtime  SNPA
3333.3333.3333  ESR3                      gi1/0/1            Up               8                  a8f9.4bab.813a
```