VRRP

VRRP (. *Virtual Router Redundancy Protocol*) — , , . IP-, .

1	// , VRRP.	**esr(config)# interface <IF-TYPE><IF-NUM>**	<IF-TYPE> – ; <IF-NUM> – F/S/P – F- (1), S – (0), P – .
		esr(config)# tunnel <TUN-TYPE><TUN-NUM>	<TUN-TYPE> – ; <TUN-NUM> – .
		esr(config)# bridge <BR-NUM>	<BR-NUM> – .
2	// , IP-.		
3	VRRP- IP-.	**esr(config-if-gi)# vrrp**	
		esr(config-if-gi)# ipv6 vrrp	
4	IP- VRRP-.	**esr(config-if-gi)# vrrp ip <ADDR/LEN> [secondary]**	<ADDR/LEN> – IP- , AAA.BBB.CCC.DDD/EE, AAA – DDD [0..255] EE [1..32]. IP- . 8 IP- . secondary – IP-.
		esr(config-if-gi)# ipv6 vrrp ip <IPV6-ADDR>	<IPV6-ADDR> – IPv6-, X:X:X:X::X, [0..FFFF]. 8- IPv6- .
5	VRRP-.	**esr(config-if-gi)# vrrp id <VRID>**	<VRID> – VRRP-, [1..255].
		esr(config-if-gi)# ipv6 vrrp id <VRID>	
6	VRRP- ( ).	**esr(config-if-gi)# vrrp priority <PR>**	<PR> – VRRP-, [1..254]. : 100.
		esr(config-if-gi)# ipv6 vrrp priority <PR>	
7	VRRP- . VRRP-, , ( ).	**esr(config-if-gi)# vrrp group <GRID>**	<GRID> – VRRP-, [1..32].
		esr(config-if-gi)# ipv6 vrrp group <GRID>	
8	IP-, IP- VRRP- ( ).	**esr(config-if-gi)# vrrp source-ip <IP>**	<IP> – IP- , AAA.BBB.CCC.DDD, [0..255].
		esr(config-if-gi)# ipv6 vrrp source-ip <IPV6>	<IPV6> – IPv6- , X:X:X:X::X, [0..FFFF].
9	VRRP- ( ).	**esr(config-if-gi)# vrrp timers advertise <TIME>**	<TIME> – , [1..40]. : 1 .
		esr(config-if-gi)# ipv6 vrrp timers advertise <TIME>	
10	, GratuituousARP-() Master ( ).	**esr(config-if-gi)# vrrp timers garp delay <TIME>**	<TIME> – , [1..60]. : 5 .
11	GratuituousARP-, Master ( ).	**esr(config-if-gi)# vrrp timers garp repeat <COUNT>**	<COUNT> – , [1..60]. : 5.
12	, GratuituousARP-(), Master ( ).	**esr(config-if-gi)# vrrp timers garp refresh <TIME>**	<TIME> – , [1..65535]. : .
13	GratuituousARP-, garprefresh Master ( ).	**esr(config-if-gi)# vrrp timers garp refresh-repeat <COUNT>**	<COUNT> – , [1..60]. : 1.
14	, Backup- Master Master- ( ).	**esr(config-if-gi)# vrrp preempt disable**	

		esr(config-if-gi)# ipv6 vrrp preempt disable	
15	, Backup- Master Master- ( ).	**esr(config-if-gi)# vrrp preempt delay <TIME>** **esr(config-if-gi)# ipv6 vrrp preempt delay <TIME>**	<TIME> – , [1..1000]. : 0
16	( ).	**esr(config-if-gi)# vrrp authentication key ascii-text { <CLEAR-TEXT> | encrypted <ENCRYPTED-TEXT> }**	<CLEAR-TEXT> – , 8 16 ; <ENCRYPTED-TEXT> – 8 16 (16 32) (0xYYYY...) (YYYY...).
17	( ).	**esr(config-if-gi)# vrrp authentication algorithm <ALGORITHM>**	<ALGORITHM> – : • **cleartext** – , ; • **md 5** – md5.
18	VRRP- ( ).	**esr(config-if-gi)# vrrp version <VERSION>**	<VERSION> – VRRP-: 2, 3.
19	, vrrp IP- UP ( ).	**esr(config-if-gi)# vrrp force-up**	
20	ipv6 vrrp MASTER ND ( ).	**esr(config-if-gi)# ipv6 vrrp timers nd delay <TIME>**	<TIME> – , [1..60]. : 5
21	ND ipv6 vrrp MASTER ( ).	**esr(config-if-gi)# ipv6 vrrp timers nd refresh <TIME>**	<TIME> – , [1..65535]. : 5
22	ND ipv6 vrrp MASTER ( ).	**esr(config-if-gi)# ipv6 vrrp timers nd refresh-repeat <NUM>**	<NUM> – , [1..60]. : 0
23	ND- ipv6 vrrp MASTER ( ).	**esr(config-if-gi)# ipv6 vrrp timers nd repeat <NUM>**	<NUM> – , [1..60]. : 1

1

:

VLAN 50, VRRP. IP- 192.168.1.1.

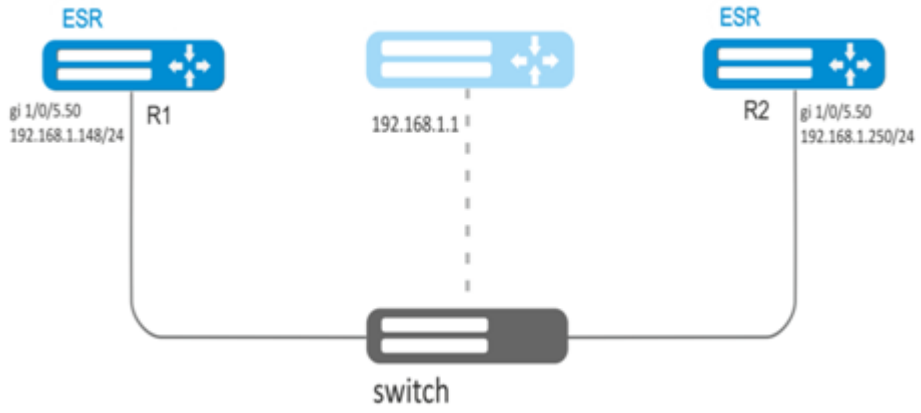

:

:

- -;
- -;
- IP- -.

:

R1.

- VRRP. VRRP:

```
R1(config)#interface gi 1/0/5.50
R1(config-subif)# vrrp id 10
```

IP- 192.168.1.1/24:

```
R1(config-subif)# vrrp ip 192.168.1.1
```

VRRP**:**

```
R1(config-subif)# vrrp
R1(config-subif)# exit
```

R2.

2

:

192.168.1.0/24 VLAN 50 192.168.20.0/24 VLAN 60, VRRP c . VRRP- . IP- 192.168.1.1 192.168.20.1.

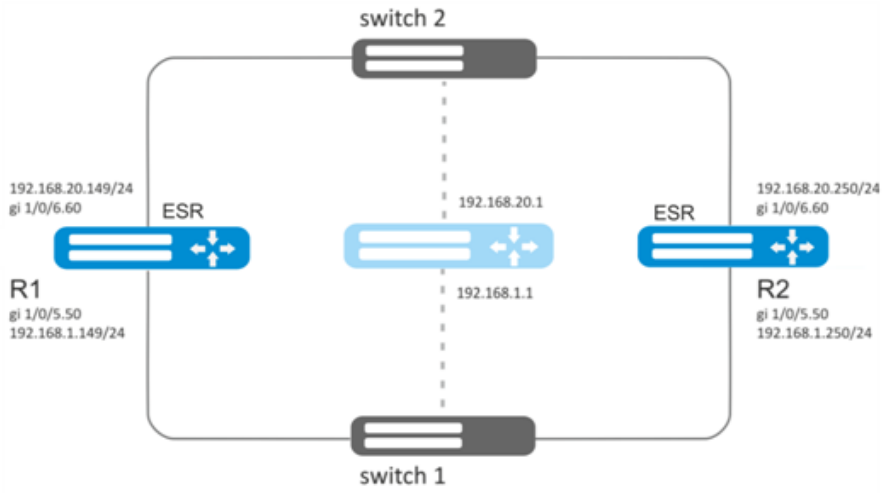

:

:

- -;
- -;
- IP- -.

:

R1.

VRRP 192.168.1.0/24 -.

VRRP:

```
R1(config-sub)#interface gi 1/0/5.50
R1(config-subif)# vrrp id 10
```

IP- 192.168.1.1:

```
R1(config-subif)# vrrp ip 192.168.1.1
```

VRRP-:

```
R1(config-subif)# vrrp group 5
```

VRRP**:**

```
R1(config-subif)# vrrp
R1(config-subif)# exit
```

VRRP 192.168.20.0/24 -.

VRRP:

```
R1(config-sub)#interface gi 1/0/6.60
R1(config-subif)# vrrp id 20
```

IP- 192.168.20.1:

```
R1(config-subif)# vrrp ip 192.168.20.1
```

VRRP-:

```
R1(config-subif)# vrrp group 5
```

VRRP**:**

```
R1(config-subif)# vrrp
R1(config-subif)# exit
```

R2.

firewall VRRP (112).

tracking

Tracking — VRRP/SLA.

1	VRRP " VRRP" SLA.		
2	Tracking- Tracking-.	**esr(config)#track <ID>**	<ID> – Tracking-, [1..100].
3	VRRP/SLA-, Tracking- .	**esr(config-track)# track vrrp id <VRID> state [not] { master | backup | fault } [vrf <VRF>]**	<VRID> – VRRP-, [1..255]; <VRF> – VRF, 31 .
		esr(config-track)# track sla test <NUM> [mode <MODE>]	<NUM> – SLA-, [1..10000]; <MODE> – sla-, : • state – sla-; • reachability – , sla-.
4	Tracking-.	**esr(config-track)#enable**	
5	( ).	**esr(config-track)# delay { down | up } <TIME>**	<TIME> – , [1..300].
6	tracking ( ).	**esr(config-track)# mode <MODE>**	<MODE> – Tracking- , : • and – Tracking- , ; • or – Tracking- , .

7	C ESR, Tracking-.		
7.1	IP- ( ).	**esr(config)# ip route [vrf <VRF>] <SUBNET> { <NEXTHOP> [resolve] | interface <IF> | tunnel <TUN> | wan load-balance rule <RULE> | blackhole | unreachable | prohibit } [<METRIC>] [track <TRACK-ID>]**	<VRF> – VRF, 31 ; <SUBNET> – , : AAA.BBB.CCC.DDD – IP- , [0..255]; AAA.BBB.CCC.DDD/NN – IP- , AAA-DDD [0..255] NN [1..32]. <NEXTHOP> – IP- AAA.BBB.CCC.DDD, [0..255]; • **resolve** – IP- . , ; <IF> – IP-, , ; <TUN> – , , ; <RULE> – wan, [1..50]; • **blackhole** – ; • **unreachable** – , ICMP Destination unreachable (Host unreachable, code 1); • **prohibit** – , , ICMP Destination unreachable (Communication administratively prohibited, code 13); [METRIC] – , [0..255]; <TRACK-ID> – Tracking-. Tracking-, , .
7.2	( ).	**esr(config-if-gi)# shutdown track <ID>**	<ID> – Tracking-, [1..100].
7.3	VRRP- ( ).	**esr(config-if-gi)# vrrp priority track <ID> { <PRIO> | increment <INC> | decrement <DEC> }**	<ID> – Tracking-, [1..100]; <PRIO> – VRRP-, , Tracking- , [1..254]; <INC> – VRRP-, Tracking- , [1..254]; <DEC> – VRRP-, Tracking- , [1..254].
7.4	Next-Hop , (ACL) ( ).	**esr(config-route-map-rule)# action set ip next-hop verify-availability <NEXTHOP><METRIC> track <ID>**	<NEXTHOP> – IP- AAA.BBB.CCC.DDD, [0..255]; <METRIC> – , [0..255]; <ID> – Tracking-, [1..100].
7.5	BGP AS-Path, AS-Path ( ).	**esr(config-route-map-rule)# action set as-path prepend <AS-PATH> track <ID>**	<AS-PATH> – , . AS,AS,AS, [1..4294967295]; <ID> – Tracking-, [1..100].
7.6	BGP MED , ( ).	**esr(config-route-map-rule)# action set metric bgp <METRIC> track <ID>**	<METRIC> – BGPMED, [0..4294967295]; <ID> – Tracking-, [1..100].

:

192.168.0.0/24 192.168.0.1/24 VRRP R1 R2. R1 R2 192.168.1.0/30. 10.0.1.0/24 R2. IP- 192.168.0.4/24 192.168.0.1

R1 vrrp backup, 10.0.1.0/24 . R1 vrrp master, 10.0.1.0/24 192.168.1.2.

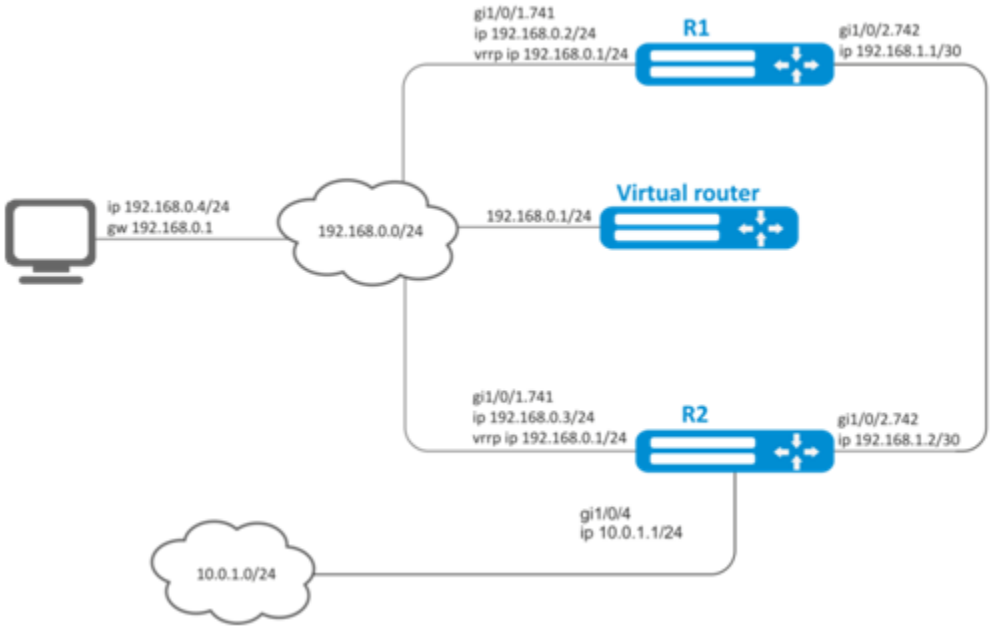

:

R1

```
hostname R1
interface gigabitethernet 1/0/1
  switchport forbidden default-vlan
exit
interface gigabitethernet 1/0/1.741
  ip firewall disable
  ip address 192.168.0.2/24
  vrrp id 10
  vrrp ip 192.168.0.1/24
  vrrp
exit
interface gigabitethernet 1/0/2
  switchport forbidden default-vlan
exit
interface gigabitethernet 1/0/2.742
  ip firewall disable
  ip address 192.168.1.1/30
exit
```

R2

```
hostname R2
interface gigabitethernet 1/0/1
  switchport forbidden default-vlan
exit
interface gigabitethernet 1/0/1.741
  ip firewall disable
  ip address 192.168.0.3/24
  vrrp id 10
  vrrp ip 192.168.0.1/24
  vrrp
exit
interface gigabitethernet 1/0/2
  switchport forbidden default-vlan
exit
interface gigabitethernet 1/0/2.742
  ip firewall disable
  ip address 192.168.1.2/30
exit
interface gigabitethernet 1/0/4
  ip firewall disable
  ip address 10.0.1.1/24
exit
```

:

R2 10.0.1.0/24 , , R2 vrrp master, . IP- 10.0.1.0/24 , R1 vrrp master.

track-object :

```
R1(config)# track 1
R1(config-track)# track vrrp id 10 state master
R1(config-track)# enable
R1(config-track)# exit
```

10.0.1.0/24 192.168.1.2, track 1:

```
R1(config)# ip route 10.0.1.0/24 192.168.1.2 track 1
```

firewall failover

Firewall failover firewall.

1	.	**ip firewall failover sync-type <MODE>**	<MODE> – : unicast – unicast; multicast – multicast.
2	IP- , Firewall .	**ip firewall failover source-address <ADDR>**	<ADDR> – IP- , , AAA.BBB.CCC.DDD, [0..255].
3	IP- Firewall unicast-.	**ip firewall failover destination-address <ADDR>**	<ADDR> – IP- , AAA.BBB.CCC.DDD, [0..255].
	IP-, Firewall multicast-.	**ip firewall failover multicast-address <ADDR>**	<ADDR> – IP-, AAA.BBB.CCC.DDD, [0..255].
4	Firewall multicast-, multicast-.	**ip firewall failover multicast-group <GROUP>**	<GROUP> – multicast-, [1000..9999].
5	UDP- Firewall, unicast-. ( )	**ip firewall failover port <PORT>**	<PORT> – Firewall, [1..65535].
6	VRRP-, (/) Firewall. ( )	**ip firewall failover vrrp-group <GRID>**	<GRID> – VRRP-, [1..32].
7	Firewall.	**ip firewall failover**	

:

firewall VRRP- unicast-. VRRP, vrrp- .

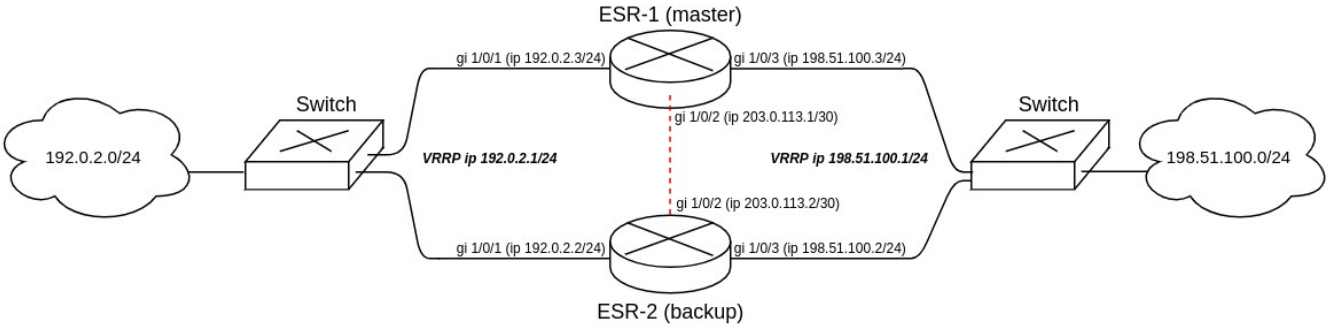

:

1) vrrp- . master vrrp priority 20, backup vrrp priority 10

2) firewall failover unicast udp- 3333 VRRP-.

3) vrrp udp.

:

ESR-1 (master).

IP- .

```
master(config)# interface gigabitethernet 1/0/1
master(config-if-gi)# security-zone trusted
master(config-if-gi)# ip address 192.0.2.3/24
master(config-if-gi)# exit
master(config)# interface gigabitethernet 1/0/2
master(config-if-gi)# security-zone trusted
master(config-if-gi)# ip address 203.0.113.1/30
master(config-if-gi)# exit
master(config)# interface gigabitethernet 1/0/3
master(config-if-gi)# security-zone trusted
master(config-if-gi)# ip address 198.51.100.3/24
master(config-if-gi)# exit
```

vrrp- . : VRRP, ip- VRRP, VRRP, VRRP- .

master vrrp preempt delay, firewall , backup- .

vrrp- "vrrp".

, vrrp preempt delay vrrp preempt disable, vrrp- vrrp- .

vrrp- vrrp- (master, backup), vrrp- firewall failover.

```
master(config)# interface gigabitethernet 1/0/1
master(config-if-gi)# vrrp id 1
master(config-if-gi)# vrrp ip 192.0.2.1/24
master(config-if-gi)# vrrp priority 20
master(config-if-gi)# vrrp group 1
master(config-if-gi)# vrrp preempt delay 60
master(config-if-gi)# vrrp
master(config-if-gi)# exit

master(config)# interface gigabitethernet 1/0/3
master(config-if-gi)# vrrp id 3
master(config-if-gi)# vrrp ip 198.51.100.1/24
master(config-if-gi)# vrrp priority 20
master(config-if-gi)# vrrp group 1
master(config-if-gi)# vrrp preempt delay 60
master(config-if-gi)# vrrp
master(config-if-gi)# exit
```

firewall failover.

unicast:

```
master(config)# ip firewall failover sync-type unicast
```

IP- , Firewall :

```
master(config)# ip firewall failover source-address 203.0.113.1
```

IP- Firewall unicast-:

```
master(config)# ip firewall failover destination-address 203.0.113.2
```

UDP- Firewall:

```
master(config)# ip firewall failover port 3333
```

Firewall.

```
master(config)# ip firewall failover
```

firewall failover:

```
master(config)# object-group service failover
master(config-object-group-service)# port-range 3333
master(config-object-group-service)# exit
```

security zone-pair trusted self :

```
master(config)# security zone-pair trusted self
master(config-zone-pair)# rule 66
master(config-zone-pair-rule)# action permit
master(config-zone-pair-rule)# match protocol vrrp
master(config-zone-pair-rule)# enable
master(config-zone-pair-rule)# exit
master(config-zone-pair)# rule 67
master(config-zone-pair-rule)# action permit
master(config-zone-pair-rule)# match protocol udp
master(config-zone-pair-rule)# match destination-port failover
master(config-zone-pair-rule)# enable
master(config-zone-pair-rule)# exit
master(config-zone-pair)# exit
```

vrrp- :

```
master# show vrrp
Virtual router   Virtual IP                          Priority   Preemption   State
--------------   --------------------------------   --------   ----------   ------
1                192.0.2.1/24                      20         Enabled      Master
3                198.51.100.1/24                   20         Enabled      Master
```

Firewall :

```
master# show ip firewall failover
Communication interface:                    gigabitethernet 1/0/2
Status:                                     Running
Bytes sent:                                 2496
Bytes received:                             640
Packets sent:                               271
Packets received:                           40
Send errors:                                0
Receive errors:                             0
```

:

```
master# show high-availability state
AP Tunnels:
    State:                        Disabled
    Last state change:            --
DHCP server:
    State:                        Disabled
    Last state change:            --
Firewall sessions:
    State:                        successful synchronization
    Last synchronization:         09:38:00 05.08.2021
```

ESR-2 (backup).

:

```
backup(config)# interface gigabitethernet 1/0/1
backup(config-if-gi)# security-zone trusted
backup(config-if-gi)# ip address 192.0.2.2/24
backup(config-if-gi)# vrrp id 1
backup(config-if-gi)# vrrp ip 192.0.2.1/24
backup(config-if-gi)# vrrp priority 10
backup(config-if-gi)# vrrp group 1
backup(config-if-gi)# vrrp
backup(config-if-gi)# exit
```

```
backup(config)# interface gigabitethernet 1/0/2
backup(config-if-gi)# security-zone trusted
backup(config-if-gi)# ip address 203.0.113.2/30
backup(config-if-gi)# exi
```

```
backup(config)# interface gigabitethernet 1/0/3
backup(config-if-gi)# security-zone trusted
backup(config-if-gi)# ip address 198.51.100.2/24
backup(config-if-gi)# vrrp id 3
backup(config-if-gi)# vrrp ip 198.51.100.1/24
backup(config-if-gi)# vrrp priority 10
backup(config-if-gi)# vrrp group 1
backup(config-if-gi)# vrrp
backup(config-if-gi)# exit
```

firewall failover:

```
backup(config)# ip firewall failover sync-type unicast
backup(config)# ip firewall failover source-address 203.0.113.2
backup(config)# ip firewall failover destination-address 203.0.113.1
backup(config)# ip firewall failover port 3333
backup(config)# ip firewall failover vrrp-group 1
backup(config)# ip firewall failover
```

ESR-1 (master).