1.4.3 MSAN MC1000

MSAN MC1000-PX
, 1
1.4.3

, , MC1000-PX ( ).

MSAN MC1000-PX – , . Voice over IP TDM, . MSAN MC1000-PX , IP-.

(TDM) NGN.

	, , , .
	, .

, .

, , .

1000- « » . , , , . POTS .

1000- Ethernet 2- , 101 Mbps. :

- POTS , ;
- VoIP 1 V5.2 c . TDM NGN.

.

1 –

	PP4G3X – ; FXS-72 – ; TMG-16 – VoIP POTS (1) VoIP-
	16- (TMG-16)
	34x10GBASE-KX (XAUI), 340 /

TDM	EDDS1[1], SS7[1], 1[1], 2[1], V5.2
VoIP	SIP, SIP-T
	TCP/IP, UDP/IP
	G.729AB, G.711(A/U), G.723.1 (6.3 Kbps, 5.3 Kbps), G.726 32 /
POTS	1152
1	16
Ethernet 1Gbps (10/100/1000BASE-T/1000BASE-X)	8
Ethernet 10Gbps (10GBASE-X)	4
	0.2
	0.8
	1152 IP-
	SNMP, CLI (console, telnet, SSH)
	SNMP, CLI (console, telnet, SSH)
	36 (A)
	7 [3]/ 14 [3]/
	-48V DC
	2600 ( ): 2 PP4G3X : 80 ; 2 PP4G3X : 40 ; FXS-72: 180 ; TMG-16: 50 .
2	440400345
2	25
	-10 +45 °
	80 %
	20

1

2

, 1:

1. **V5.2.** , V5.2. TMG-16.
2. **SIP.** SIP , SoftSwitch, .
3. **SIP-T.** Softswitch SIP-. MSAN .

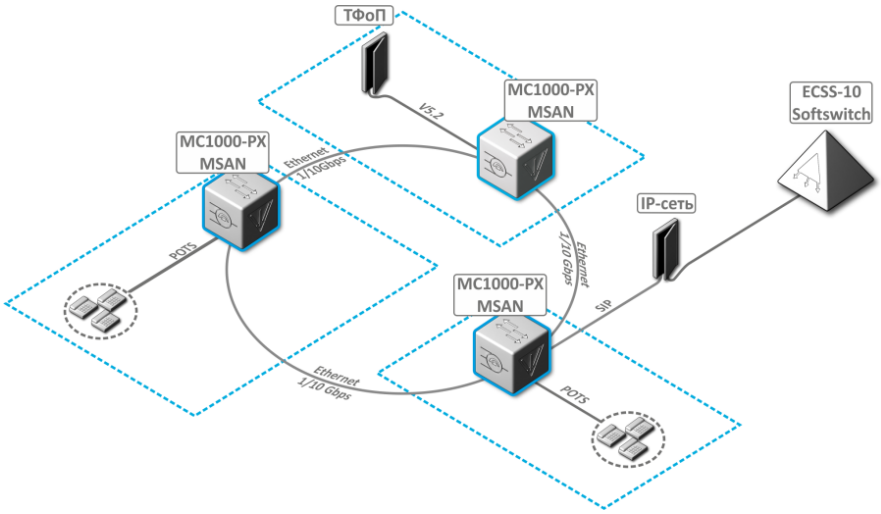

1 – 1000- NGN

1000-

MC1000-PX: Ethernet- PP4G3X, , ; , .

MC1000-PX 19" 9U. , 10 /, , .

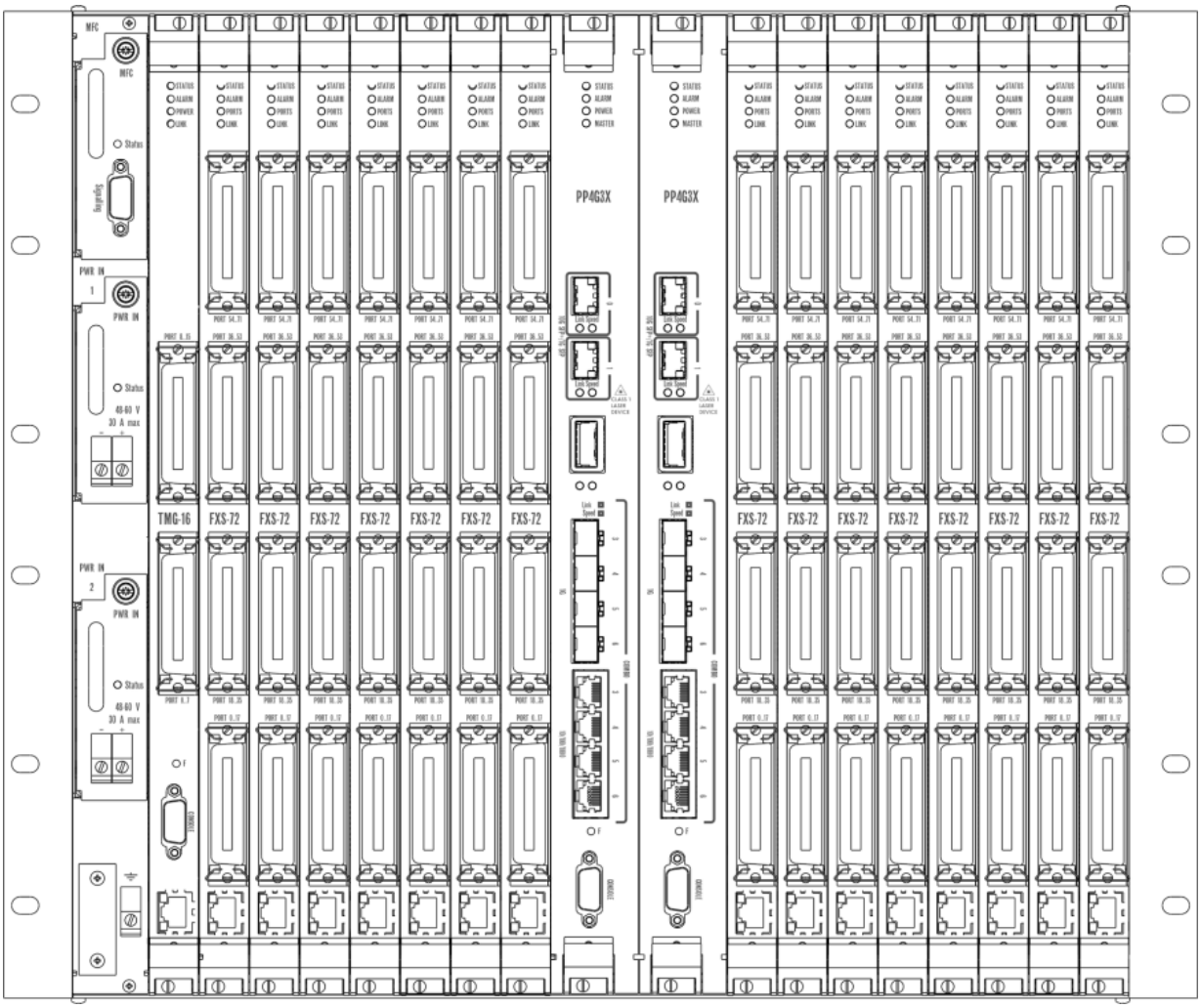
MFC
Status
PWR IN
1
PWR IN
Status
48-60 V
30 A max
PWR IN
2
PWR IN
Status
48-60 V
30 A max
TMG-16
FXS-72
PP4G3X
PP4G3X
STATUS
ALARM
POWER
PORTS
LINK
MASTER
Link Speed
CONSOLE

2 – MC1000-PX

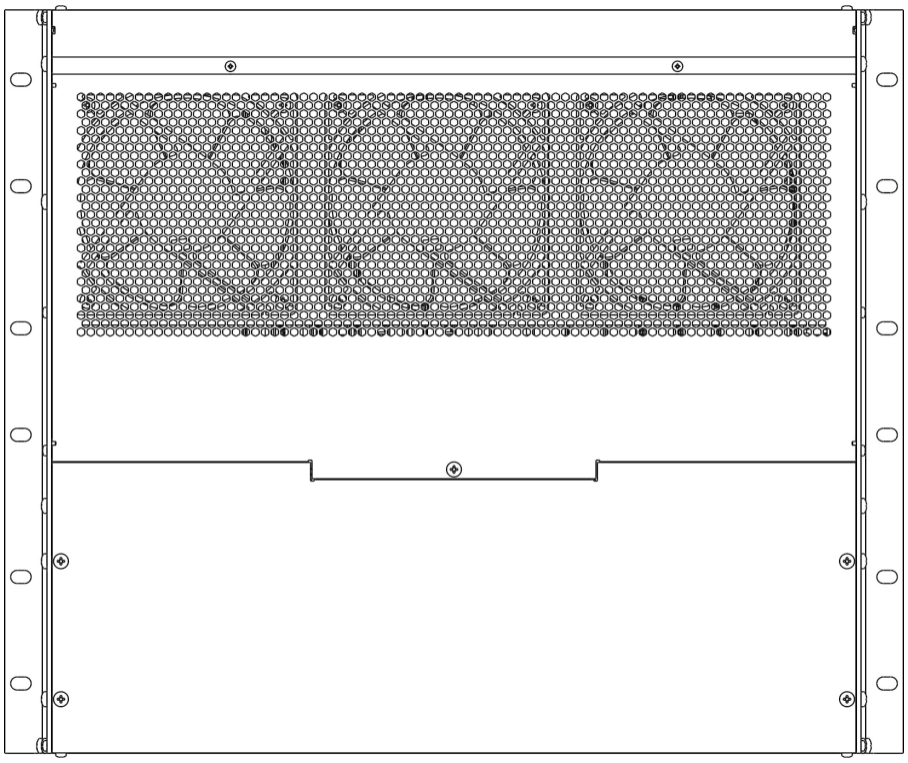

3 – MC1000-PX

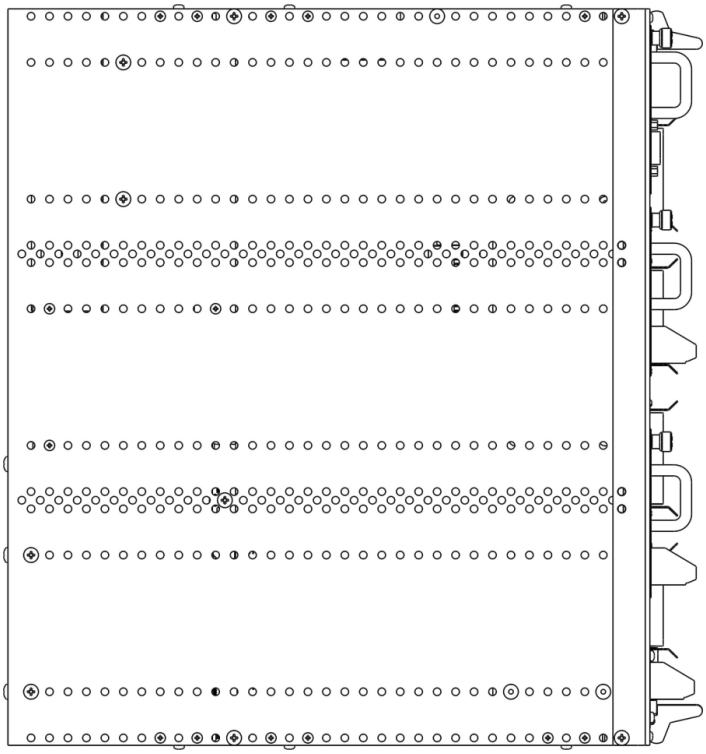

4 – MC1000-PX

MC1000-PX , . – . . 5.

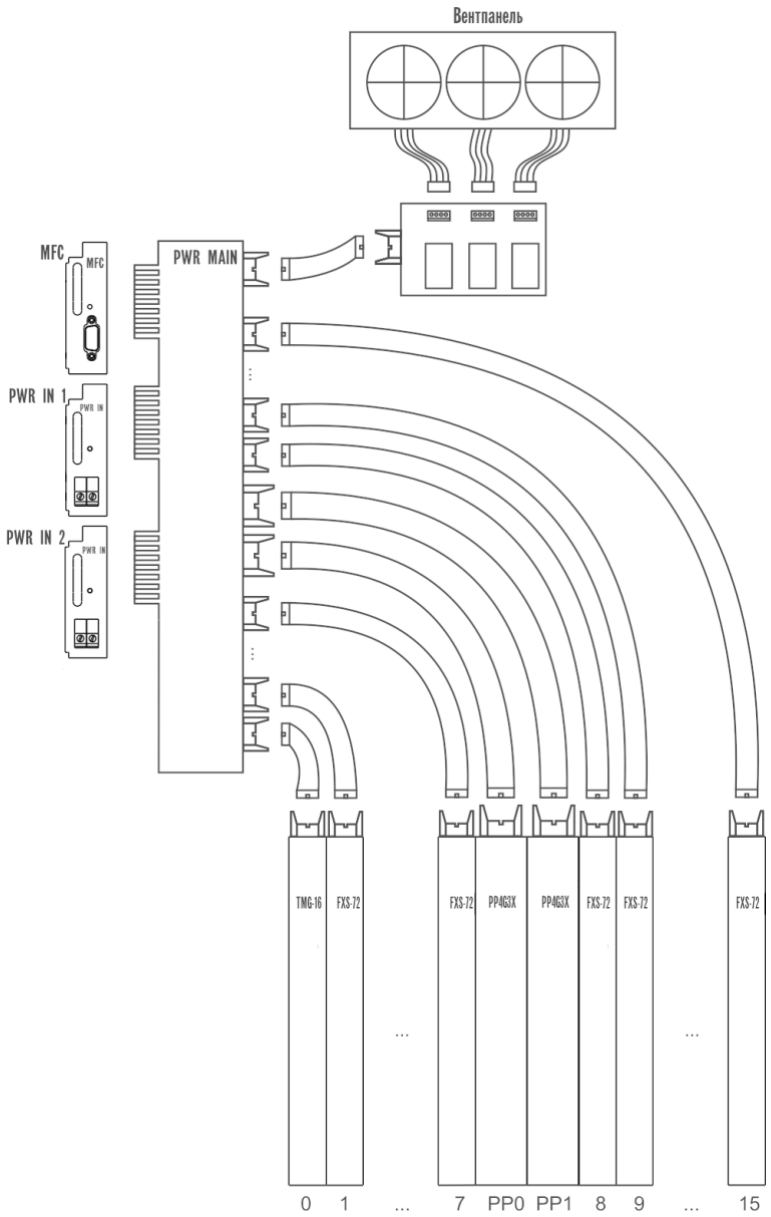

5 – MC1000-PX

( ) , 2:

1. MFC. . «Signalling» , , « », , 6.

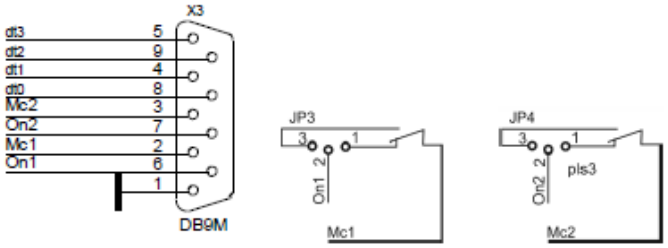

6 – «Signalling»

DB9. .

. 8 (dt0), 4 (dt1), 9 (dt2), 5 (dt3).

2-6 (1) 3-7 (2). 2 (Mc1) 3 (Mc2) – , 6 (On1) 7 (On2) – (JP3, JP4), (JP3, JP4).

:

- 1;
- 250 , 220 ;
- 30 ;
- 1000 500 .

7 –

1 – ;
2 – .

2. PWR IN. , . . . – .

3. .

.

«» «» . (. 3). MFC, , .

, 8.

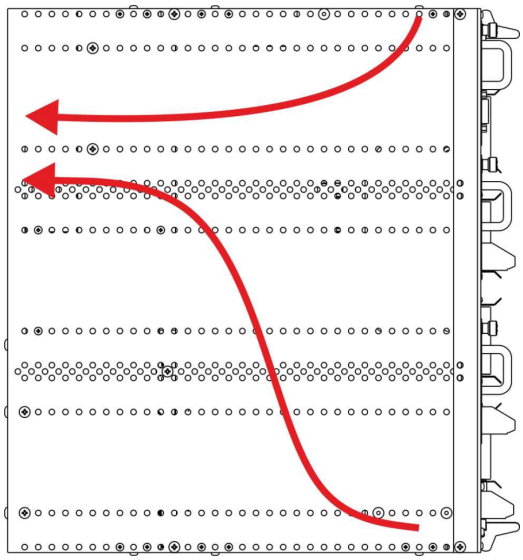

. 18 . PP4G3X. . (. 9).

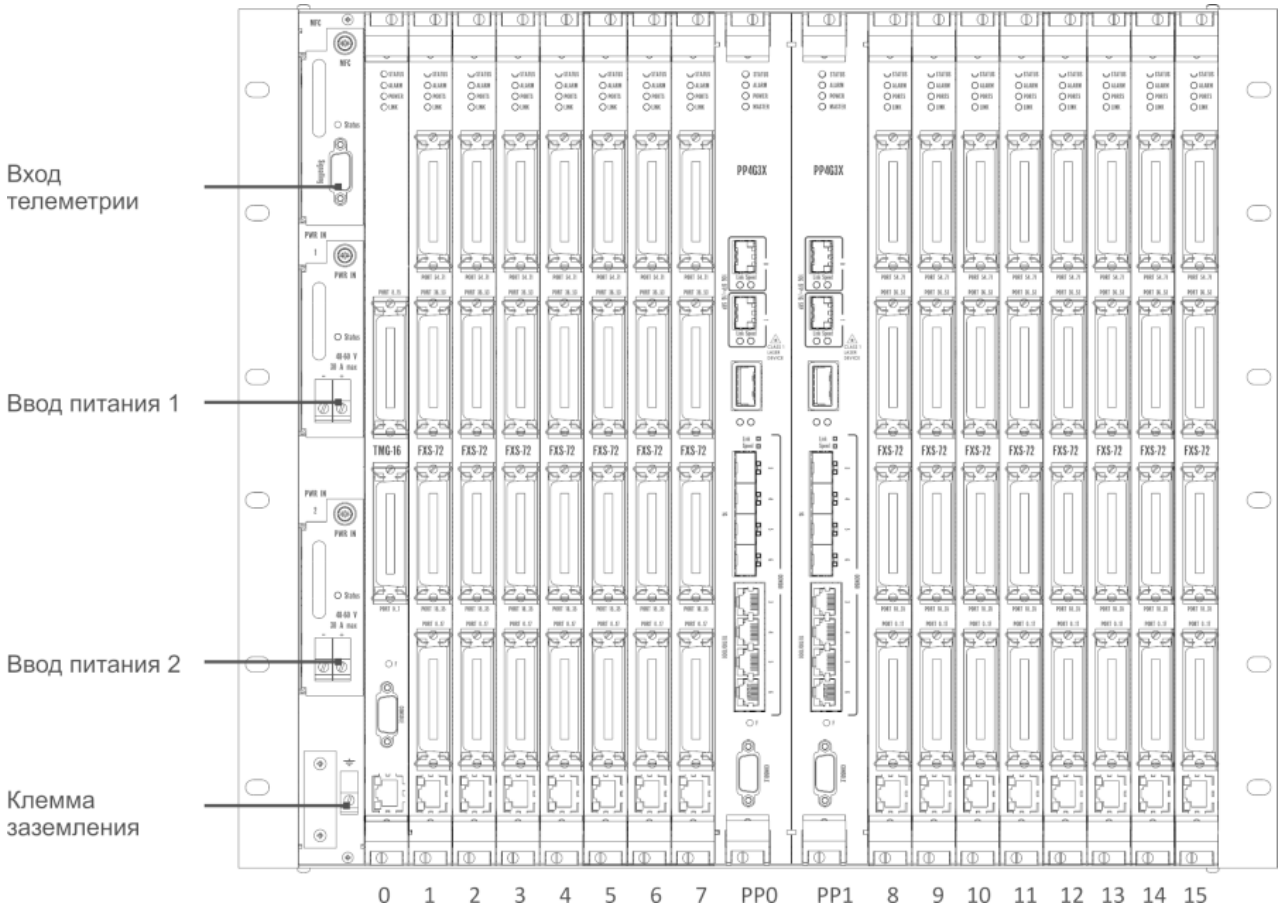

9 – MC1000-PX

16 – .

, -. . PP4G3X PP4G3X. , 10 /. **4** MC1000-PX**.**

PP4G3X

– , , , . , 10 /.

2 – , PP4G3X

1	Status	
	Alarm	
	Power	
	Master	(/)
2	[0..1]	2 10GBASE-X(SFP+)/1000BASE-X(SFP)
	Link	
	Speed	
3	2	C SFP- 10GBASE-LR/ER/ZR/LRM/CX4(XFP)

	Link	
	Speed	
4	[3..6]	4 SFP- 1000BASE-X (SFP)
5	[3..6]	4 10/100/1000BASE-T (RJ-45)
6	F	: • 10 ; • 10 .
7	Console	RS-232

, , PP4G3X 10.

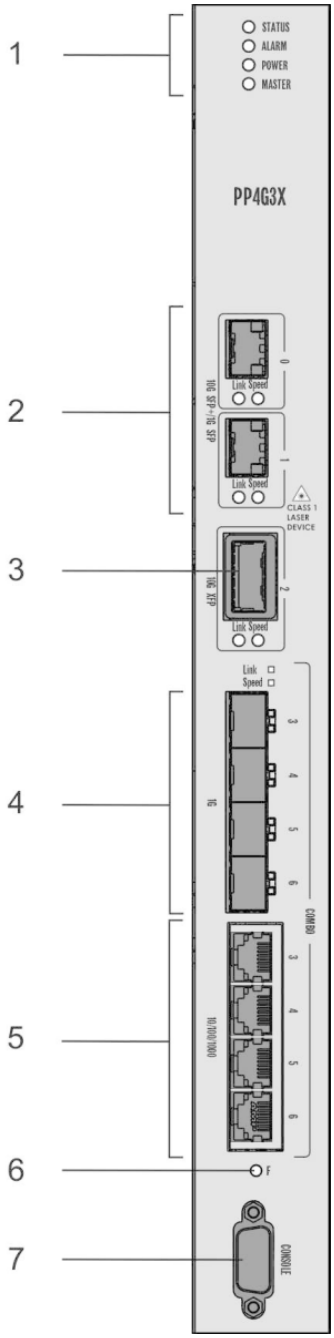

10 – , , PP4G3X

Gigabit Ethernet 3,4,5,6 3,4,5,6 . ( ), .

3.

3 – PP4G3X

	Marvell MV78x00, ARMv5TE
	1000
	2
	DDR2 SDRAM 512 MB 800
	1GB NAND Flash
	: 2x10GBASE-X(SFP+)/1000BASE-X(SFP) 10GBASE-LR/ER/ZR/LRM/CX4(XFP) 4x(10/100/1000BASE-T/1000BASE-X (SFP)) : 16x1G XAUI (1000BASE-KX4) 2x10G XAUI (10GBASE-KX4)
	1G SFP, 10G SFP+, 10G XFP
	RS232, 115200 /
Ethernet	Marvell Packet Processor
	480 /
MAC-	32K
VLAN	4K 802.1Q
QoS	8
	24 10 /
	/ 10/100/1000 / . 1/10 / .
	IEEE 802.3 10BASE-T Ethernet IEEE 802.3u 100BASE-T Fast Ethernet IEEE 802.3ab 1000BASE-T Gigabit Ethernet IEEE 802.3z Fiber Gigabit Ethernet ANSI/IEEE 802.3 IEEE 802.3x IEEE 802.3ad LACP IEEE 802.1p IEEE 802.1Q VLAN IEEE 802.1ad Provider Bridges (QinQ) IEEE 802.1v IEEE 802.3 ac IEEE 802.1d STP IEEE 802.1w RSTP IEEE 802.1s MSTP IEEE 802.1x
	70

PP4G3X ***Status*, *Alarm, Power, Master, Link, Speed***. .

4 –

Status	,	
	, 1	– F.
Alarm	,	
	,	,
	,	
Power	,	
	,	.
Master	,	

5 – 0-1

Link	,	,
	,	
Speed	,	10 /

6 – 2

Link	,	
	,	
Speed	,	

7 – Combo- 3-6

Link	,	
	,	
Speed	,	1000 /
		Link , 10 100 /

FXS-72

FXS-72 IP-. 72 (POTS).

TDM NGN IP-.

, , FXS-72 11.

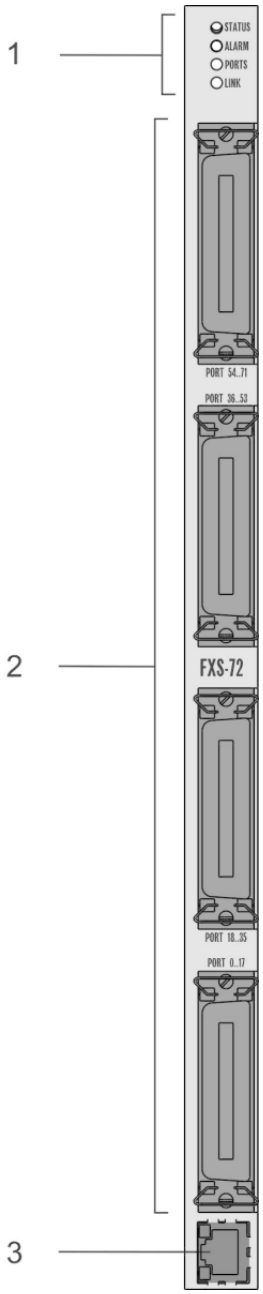

11 – , , FXS-72

8 – , FXS-72

1	Status	
	Alarm	
	Ports	
	Link	
2	Port 0..17, 18..35, 36..53, 54..71	4 CENC-36M
3		Gigabit Ethernet (10/100/1000BASE-T) RJ-45

9 – FXS-72

	Mindspeed Comcerto© 300, ARM11
	430
	2
	64 M
	32 M
	: 2x1G XAUI (1000BASE-KX4) – 1x10/100/1000BASE-T RJ45 – Management port 4xCENC-36M
Ethernet	
	1
	RJ-45
, /	, 10/100/1000 /,
	10/100/1000BASE-T
	72 ( )
	1,8
	/ (DTMF)
Caller ID	FSK (ITU-T V.23, Bell 202), DTMF, « »
	. **230. KRONE ", 230 " .**
,	SIP SIP-T
	T.38 UDP Real-Time Fax pass-through (G.711A/U)
	V.152
	VAD ( ) AEC (, G.168) CNG ( )
	G.729, annex A, annex B G.711 (PCMA, PCMU) G.723.1 (6.3 Kbps, 5.3 Kbps, Annex A) G.726-32
, ,	

G.711 (A/U) G.729 / 20-80 G.729 A / 10 G.723.1 G.726-32 .38	72 72 62 58 72 54
Ethernet	Marvell "Link Street 88E6131"
	128 /
MAC-	16K
VLAN	4K 802.1Q
QoS	4
	/ 10/100/1000 / 1 /
	IEEE 802.3 10BASE-T Ethernet IEEE 802.3u 100BASE-T Fast Ethernet IEEE 802.3ab 1000BASE-T Gigabit Ethernet IEEE 802.3z Fiber Gigabit Ethernet ANSI/IEEE 802.3 IEEE 802.3x IEEE 802.3ad LACP IEEE 802.1p IEEE 802.1Q VLAN IEEE 802.1ad Provider Bridges (QinQ) IEEE 802.1v IEEE 802.3 ac IEEE 802.1d STP IEEE 802.1w RSTP IEEE 802.1s MSTP IEEE 802.1x ITU-T G.984x
PPx4	
	30
	30

FXS-72 Status, Alarm. 10.

10 –

Status		(Alarm)
		(Alarm, Fatal)
		,
		DHCP ( )
		,
		,
	, ,	Safemode (Alarm, Fatal)
Alarm		– ,
		Warning – (,)
	( )	Error – ( )
	(200)	Fatal – (,)

Ethernet , 1000/100.

11 – Ethernet 1000/100

/		/
1000/100	**1000/100**	
		1000BASE-T,
		1000BASE-T,
		10/100BASE-TX,
		10/100BASE-TX,

VoIP- TMG-16

TDM IP-, IP- , V5.2.

, , TMG-16 12.

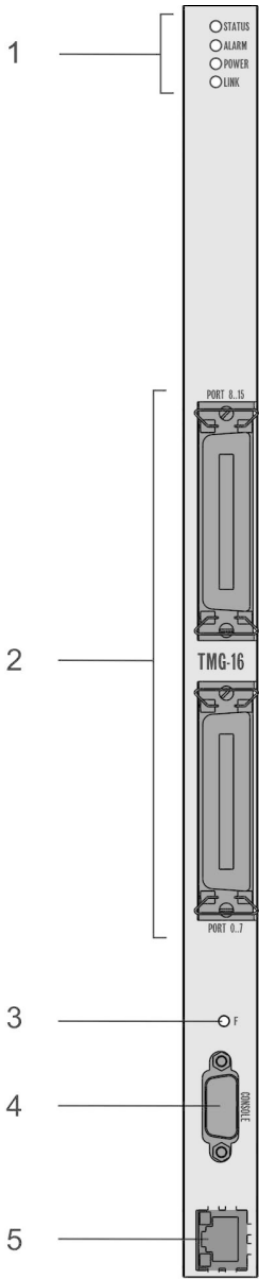

12 – , , TMG-16

12 – , TMG-16

1	Status	
	Alarm	
	Power	
	Link	
2	Port 0..7, 8..15	2 CENC-36M 1 ( )
3	F	: 10
4	Console	RS-232
5		Gigabit Ethernet (10/100/1000BASE-T) RJ-45

	Marvell Sheeva, ARMV5TE
	800
	1
	DDR2 SDRAM 256 800
	32 Serial Flash
	: 2x1G XAUI (1000BASE-KX4) – 1x10/100/1000BASE-T RJ45 – Management port 2xCENC-36M
	RS-232, 115200 /
Ethernet	
	1
	RJ-45
, /	, 10/100/1000 /,
	10/100/1000BASE-T
E1	
	ITU-T G.703,G.704
	2,048 /
	HDB3, AMI
	3,0 120 2,37 75 (G.703)
	0 6
	2
	V5.2 Access Node 16 1
RS-232	
, /	115200
	- V.28
VoIP	
	SIP T.38
	G.711 (A/U); G.729 AB; G.723.1 (6.3 Kbps, 5.3 Kbps); G.726 (32 Kbps)
VoIP , ,	
/	

G.711 (A/U) / 20-60 G.711 (A/U) / 10 G.729 A / 20-80 G.729 A / 10 G.723.1 (6.3 Kbps, 5.3 Kbps) G.726 / 20 G.726 / 10 .38	160 112 72 62 58 98 88 54
TDM- 1	128
Ethernet	Marvell "Link Street 88E6131"
	128 /
MAC-	16K
VLAN	4K 802.1Q
QoS	4
	/ 10/100/1000 / 1 / .
	IEEE 802.3 10BASE-T Ethernet IEEE 802.3u 100BASE-T Fast Ethernet IEEE 802.3ab 1000BASE-T Gigabit Ethernet ANSI/IEEE 802.3 IEEE 802.3x IEEE 802.3ad LACP IEEE 802.1p IEEE 802.1Q VLAN IEEE 802.1ad Provider Bridges (QinQ) IEEE 802.1v IEEE 802.3 ac IEEE 802.1d STP IEEE 802.1w RSTP IEEE 802.1s MSTP IEEE 802.1x IEEE 802.3ah ethernet « »
PPx4	
	50

TMG-16 ***Status*, *Alarm, Power*.** 14.

14 –

Status		
Alarm		
Power		

Ethernet , 1000/100.

15 – Ethernet 1000/100

	/	
	1000/100	**1000/100**

1000BASE-T,		
1000BASE-T,		
10/100BASE-TX,		
10/100BASE-TX,		

16 , Alarm.

16 –

Alarm		
	(critical)	
		sip-
		(Alarm « 1/ »)
		VoIP- (MSP)
		(free-run)
	(warning)	
		( )

MC1000-PX

MC1000-PX , 19" 9U, 16 . .

FXS, .

1Gbps Ethernet-, 10Gbps .

13.

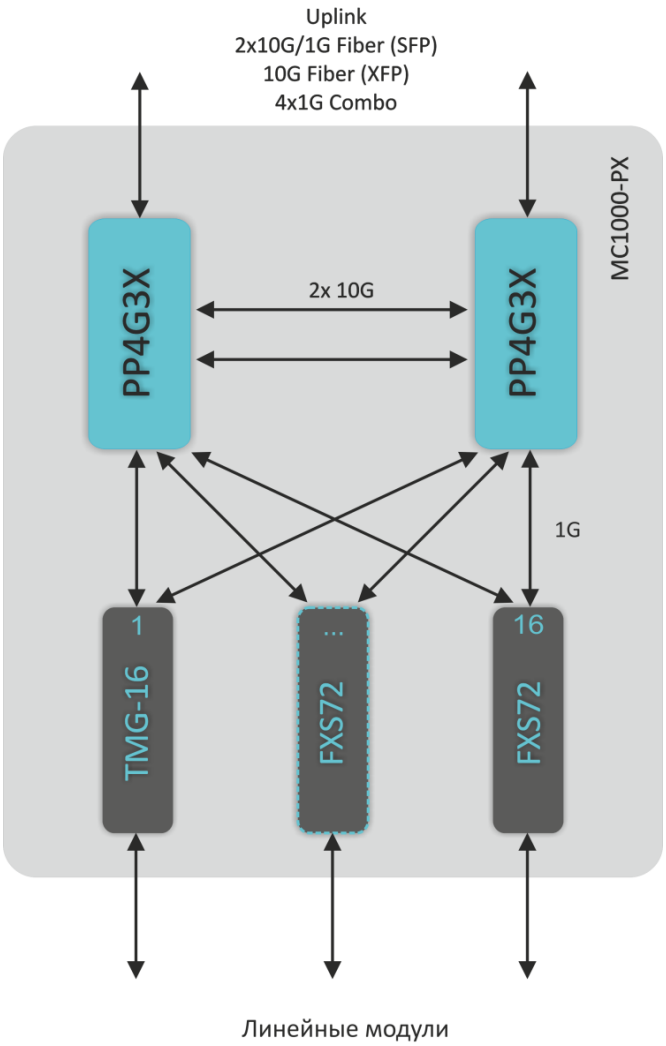

13 – MC1000-PX Ethernet- PP4G3X

FXS-72

, . , , .

SIP IP MII Ethernet switch.

FXS-72 14.

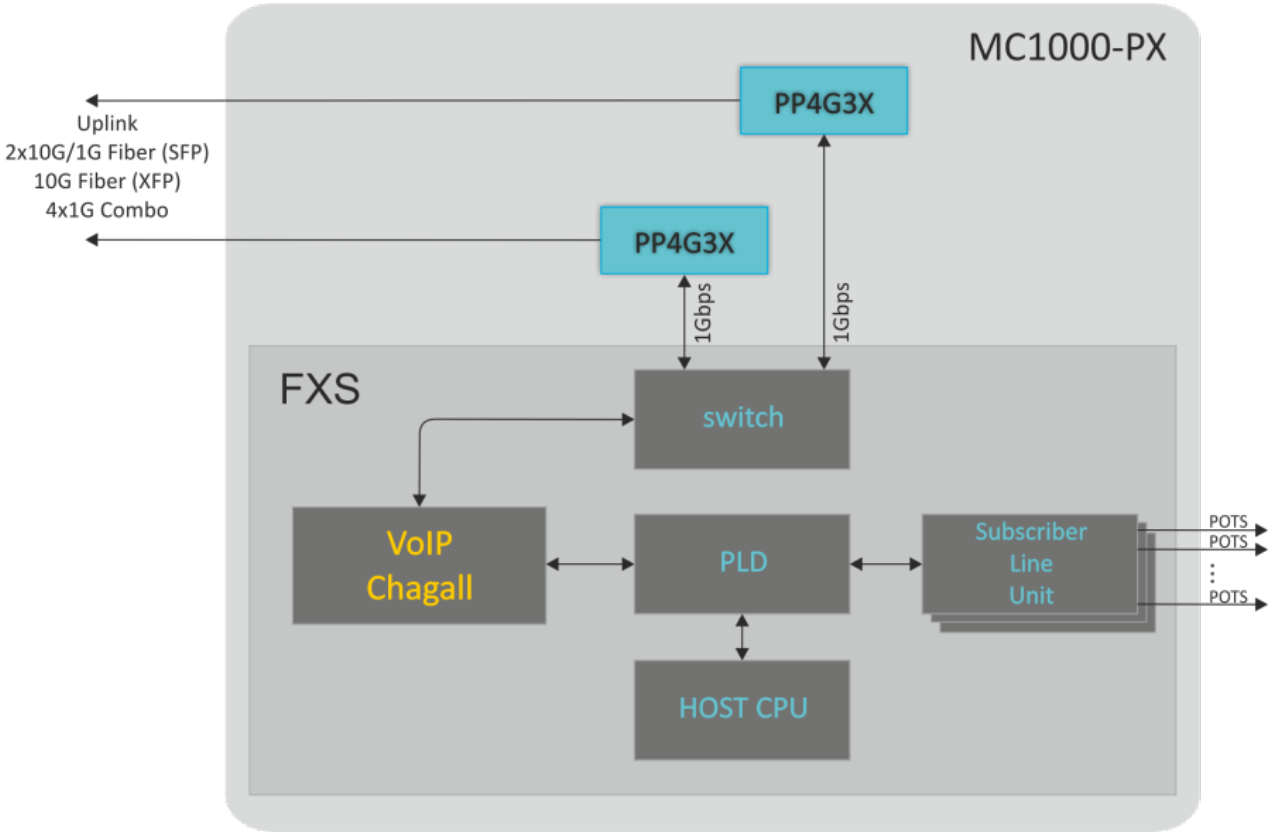

14 – FXS

TMG-16

TMG-16 :

- , :
  - ;
  - flash – 64M;
  - – 512.
- 4- E1 41;
- 6- IP SM-VP-M300;
- Ethernet- (L2);
- ;
- .

TMG-16 15.

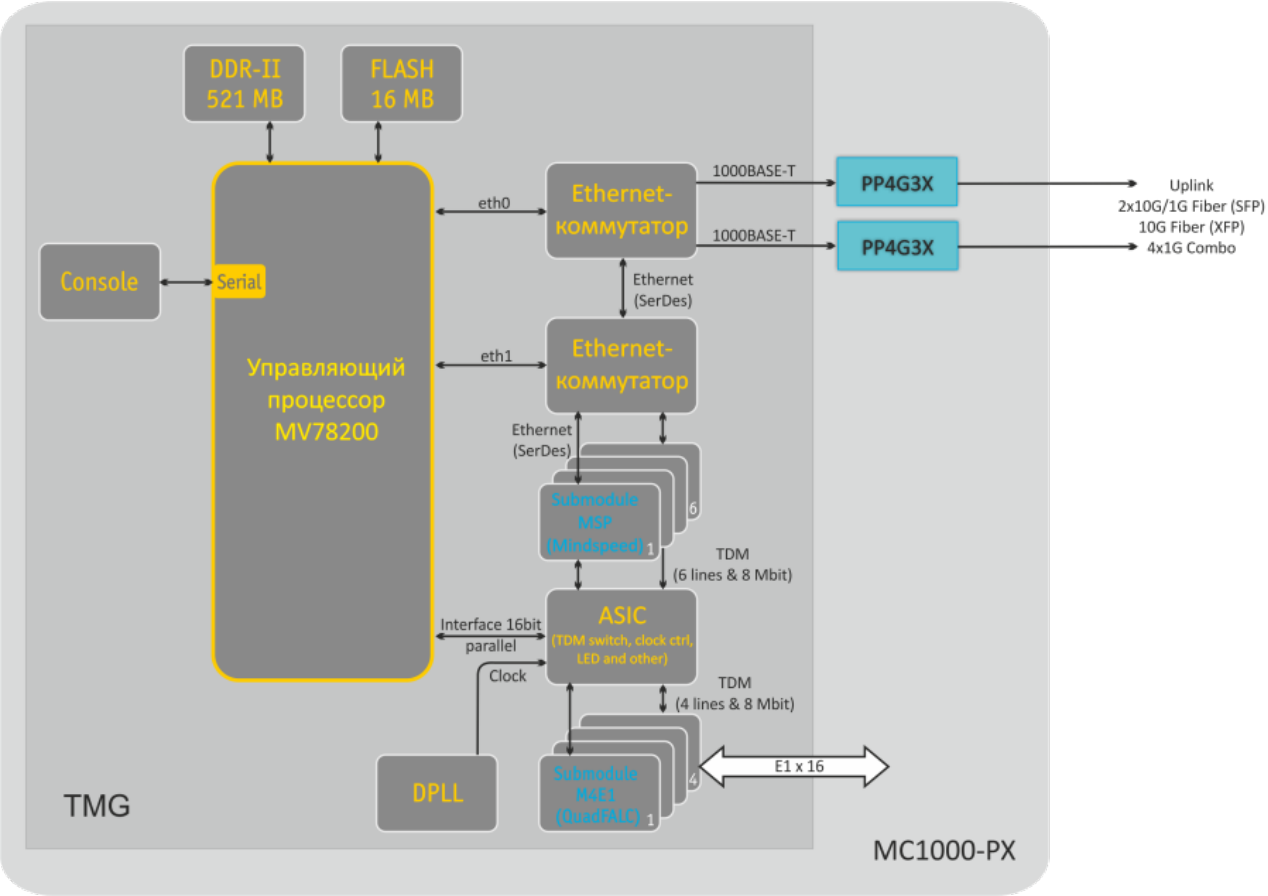

15 – TMG-16

TDM-IP , 1, VoIP (6 128 TDM), Ethernet-. IP-TDM Ethernet- VoIP, 1.

2- 1 , . , .

1(M4E1) VoIP(SM-VP-M300).

, .

, .

, , , , , , .

, . .

.

:

- , ;
- , , ;
- – ;
- . ;
- . 5 ;
- .

:

- . () ;
- ( ). 10^2;
- , - , 220 , - .

- ;
- , , ;
- ;
- , ;
- , – ;
- . .

- , , ;
- . ;
- ;
- . , , .

- , ;
- ;
- (,) , , ;
- .

.

, . , , , , (,), .

.

35 °, . . , .

, 16.

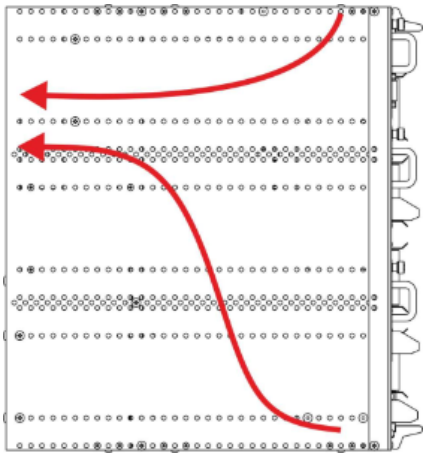

16 –

:

- 1U (44,45);
- , .

. .

17.

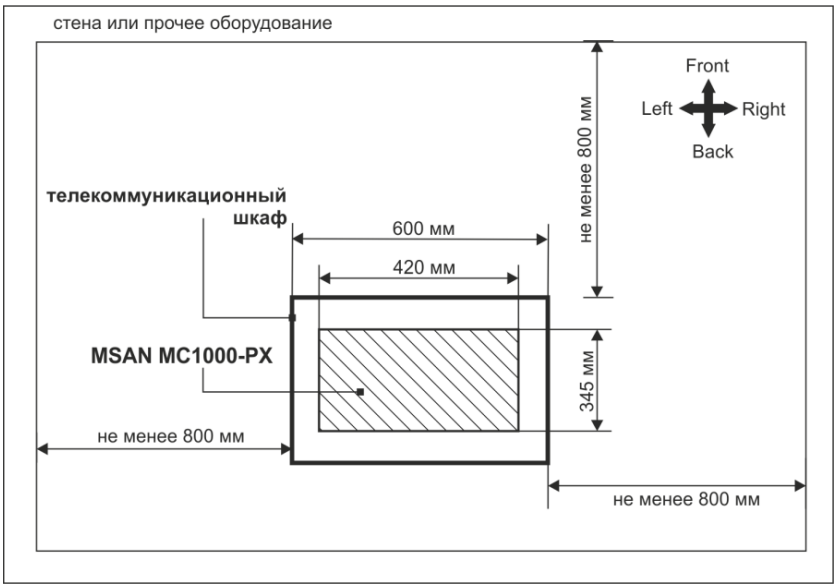
стена или прочее оборудование
Front
Left
Right
Back
не менее 800 мм
телекоммуникационный шкаф
600 мм
420 мм
MSAN MC1000-PX
345 мм
не менее 800 мм
не менее 800 мм

17 –

. .

, . 18 .

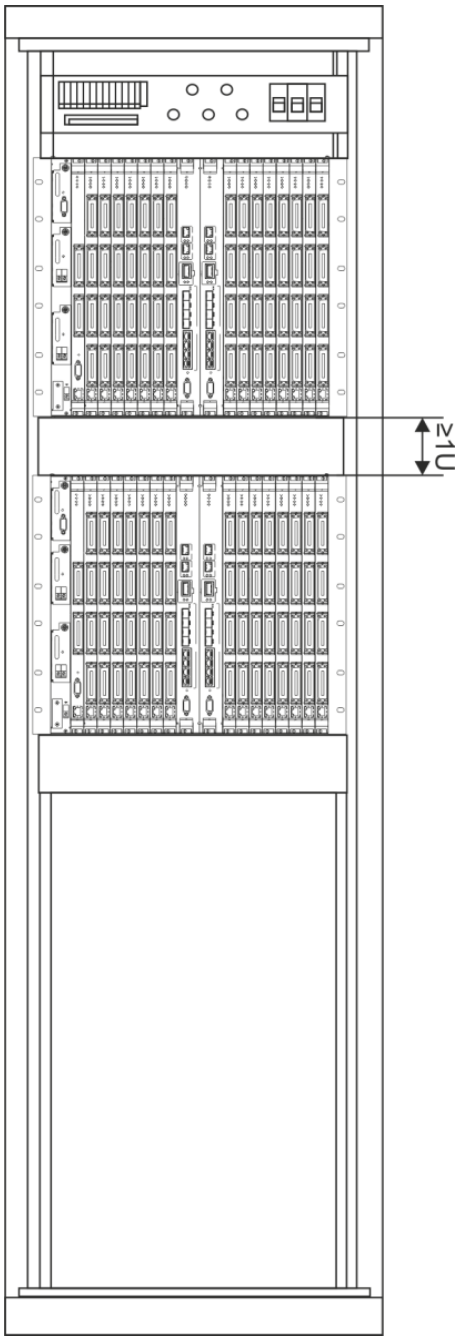

18 – MSAN-MC1000PX

.

.

.

. . .

, .

, , . . 19.

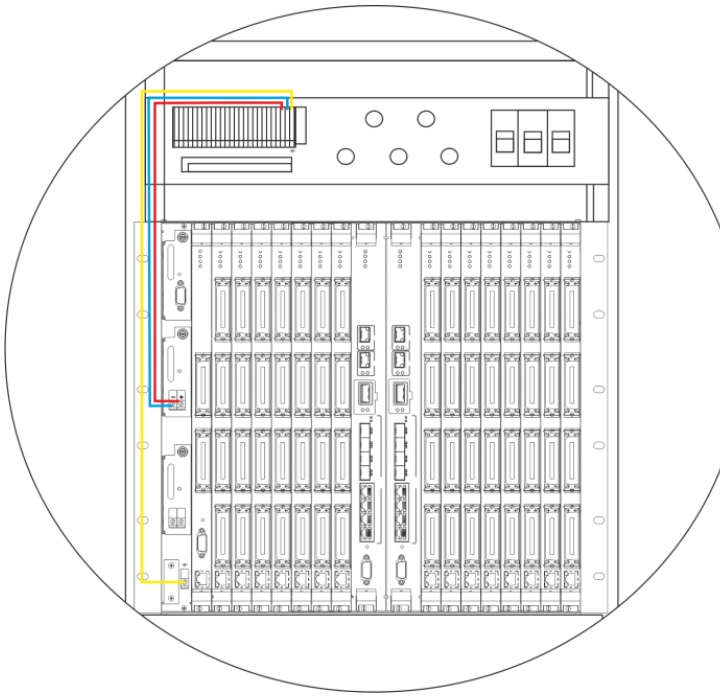

– , «+» ;
– , «-» ;
– (⏚)

19 –

. .

PP4G3X. .

, , . 40 . , .

() . . .

.

telnet ssh , RS232. telnet ssh .

IP- MC1000-PX 192.168.x.x 255.255.255.0

. , , , .

MC1000-PX:

1. (RUNNING). .
2. (CANDIDATE). .

3. (BACKUP) .

. 20.

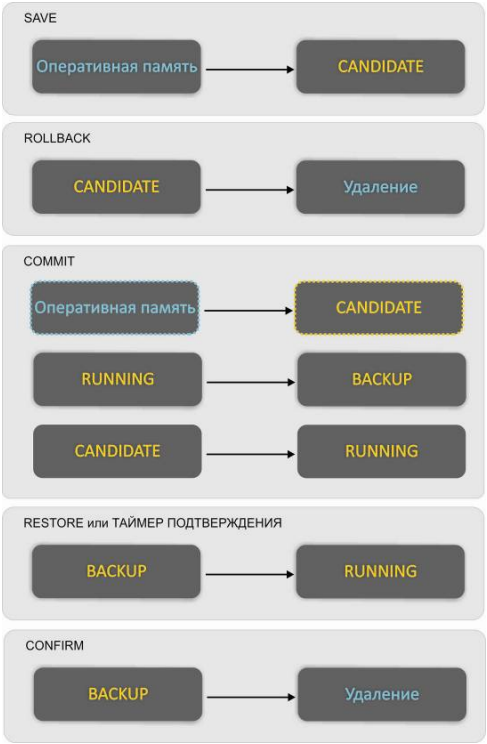

20 –

, , . **save**, CANDIDATE .

- **rollback**. CANDIDATE . (RUNNING) .

, **commit**. , - RUNNING BACKUP.

confirm, , , **commit**. , – **restore**.

save, commit, restore, rollback .

,

1000- , , , , .

– Linux 2.6.15

(CLI)

(Command Line Interface, CLI) – , , . , Telnet (, HyperTerminal).

, . MC-1000 .

, .

admin password.

, – . . – .

:

```
msan> enable
msan#
```

:

```
msan# disable
msan>
```

. . , :

```
msan> enable
Can't enable configure mode, session is occupied.
```

PP4G3X

PP4G3X MSAN .

. (,).

PP4G3X

, . :

1) .

, IP- , :

Default IP 192.168.1.2
Default mask 255.255.255.0
Default GW 192.168.1.1

(-) «COMBO 3» PP4G3X, PP0.

(- , -).

:

- : 115200 /;
- : 8 ;
- : ;
- : 1;
- : .

PP4G3X ( ). .

admin password.

PP4G3X :

```
*******************************************
*            Welcome to MSAN              *
*******************************************
```

:

```
msan login: admin
Password: _
Jan 4 03:09:57 msan login[6474]: [CONSOLE] password auth succeeded for 'admin' on 'ttyS0'
Jan 4 03:09:57 msan -clish: Try connect to CLI manager interface ...
Jan 4 03:09:57 msan cli-mgr: <climgr_client_accept> new client connection stored on index = 0
Jan 4 03:09:57 msan -clish: Try send notification about successfull 'login' to switch ...
*******************************************
*            Welcome to MSAN              *
*******************************************
Welcome to MSAN on Tue Jan 4 03:10:00 UTC 2000
msan>
```

:

```
msan> enable
msan#
```

2) :

```
msan# no stack synchronization-enable
```

3) . , «MASTER».

4) .

:

```
msan# stack synchronization-enable
```

.

PP4G3X

, . :

1) .

, IP- , :

Default IP 192.168.1.2
Default mask 255.255.255.0
Default GW 192.168.1.1

(-) «COMBO 3» PP4G3X, PP0.

(- , -).

:

- : 115200 /;
- : 8 ;
- : ;
- : 1;
- : .

PP4G3X ( ). .

admin password.

PP4G3X :

```
*******************************************
*            Welcome to MSAN               *
*******************************************
```

:

```
msan login: admin
Password: _
Jan 4 03:09:57 msan login[6474]: [CONSOLE] password auth succeeded for 'admin' on 'ttyS0'
Jan 4 03:09:57 msan -clish: Try connect to CLI manager interface ...
Jan 4 03:09:57 msan cli-mgr: <climgr_client_accept> new client connection stored on index = 0
Jan 4 03:09:57 msan -clish: Try send notification about successfull 'login' to switch ...
*******************************************
*            Welcome to MSAN               *
*******************************************
Welcome to MSAN on Tue Jan 4 03:10:00 UTC 2000
msan>
```

:

```
msan> enable
msan#
```

2) :

```
msan# no stack synchronization-enable
```

3) :

```
msan# configure
msan(config)# no stack auto-upgrade
msan(config)# do commit
msan(config)# do confirm
```

4) . .

5) . , MASTER. MASTER, 5. MASTER, . , 1, :

```
msan# stack master change
```

6) .

, , 1.

:

```
msan# stack synchronization-enable
```

.

7) :

```
msan# configure
msan(config)# stack auto-upgrade
msan(config)# do commit
msan(config)# do confirm
```

. FXS-72, TMG-16

) FXS-72.

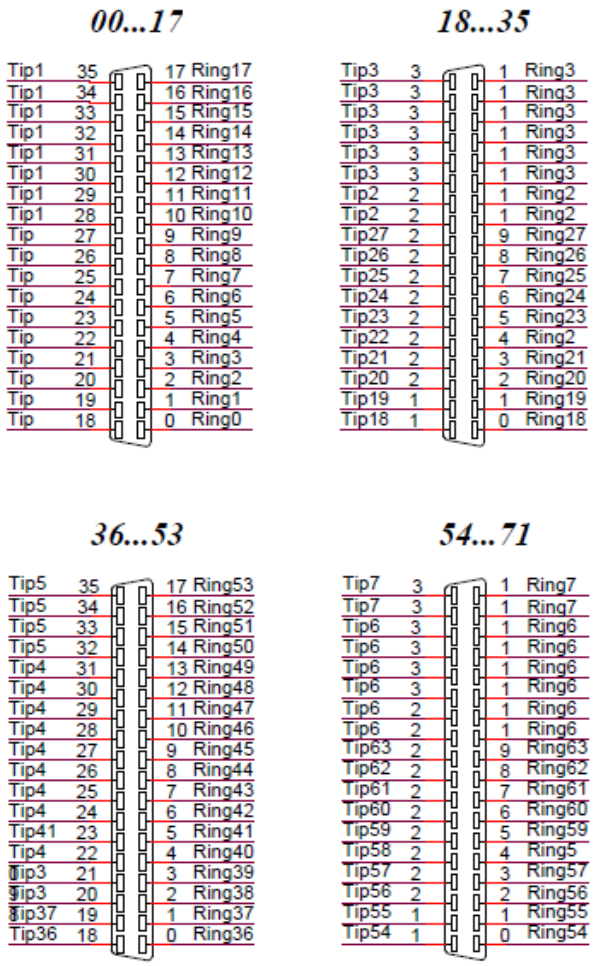

Ring[X] Tip[X] .

) TMG-16

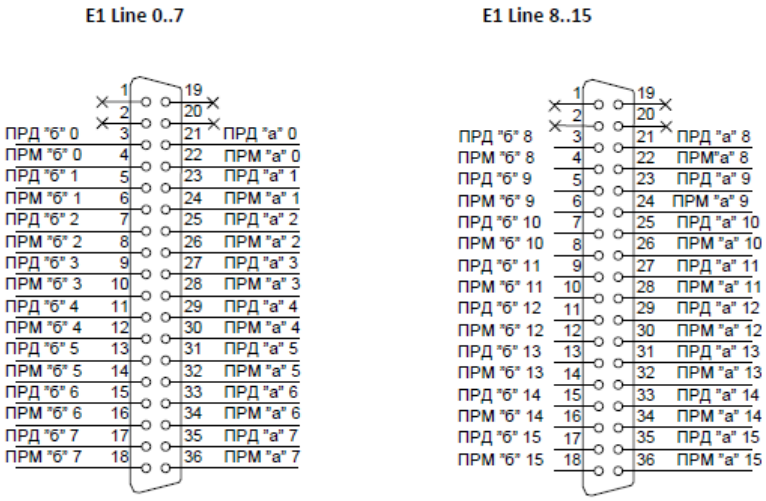

E1 Line (NENSHI NSPC-7019-18)

-	1	-	10

	19		28
-	2	-	11
	20		29
-	3	-	12
	21		30
-	4	-	13
	22		31
	5	-	14
	23		32
-	6	-	15
	24		33
-	7	-	16
	25		34
-	8	-	17
	26		35
-	9	-	18
	27		36

E1 Line (HANDIAN UTP 18PR)

-	1	-	10
	19		28
-	2	-	11
	20		29
-	3	-	12
	21		30
-	4	-	13
	22		31
-	5	-	14
	23		32
-	6	-	15
	24		33
-	7	-	16
	25		34
-	8	-	17
	26		35
-	9	-	18
	27		36

. - RS-232

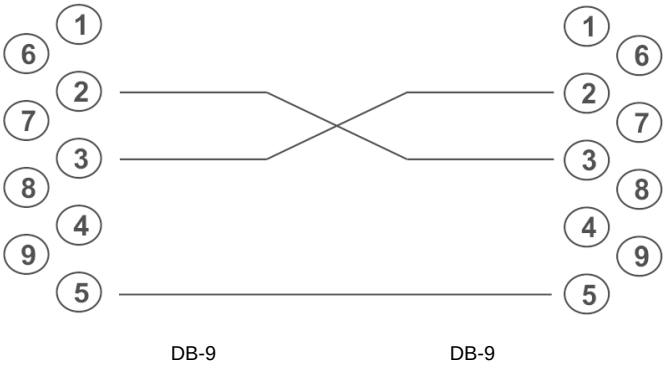

.

.

1.2	17.07.2017	1.4.3.
1.1	30.05.2014	1.4.0.
1.0	14.02.2013	.
	1.4.3	