Wi-Fi (SoftWLC)

-
- SoftWLC
-
- SoftWLC

SoftWLC - **Wi-Fi**, , Wi-Fi Enterprise . .

SoftWLC:

- Eltex, Wi-Fi.
- SoftWLC
- Hotspot , :
  -
  -
  -
- Enterprise
- Active Directory
- WEB- , .
- SSID

SoftWLC

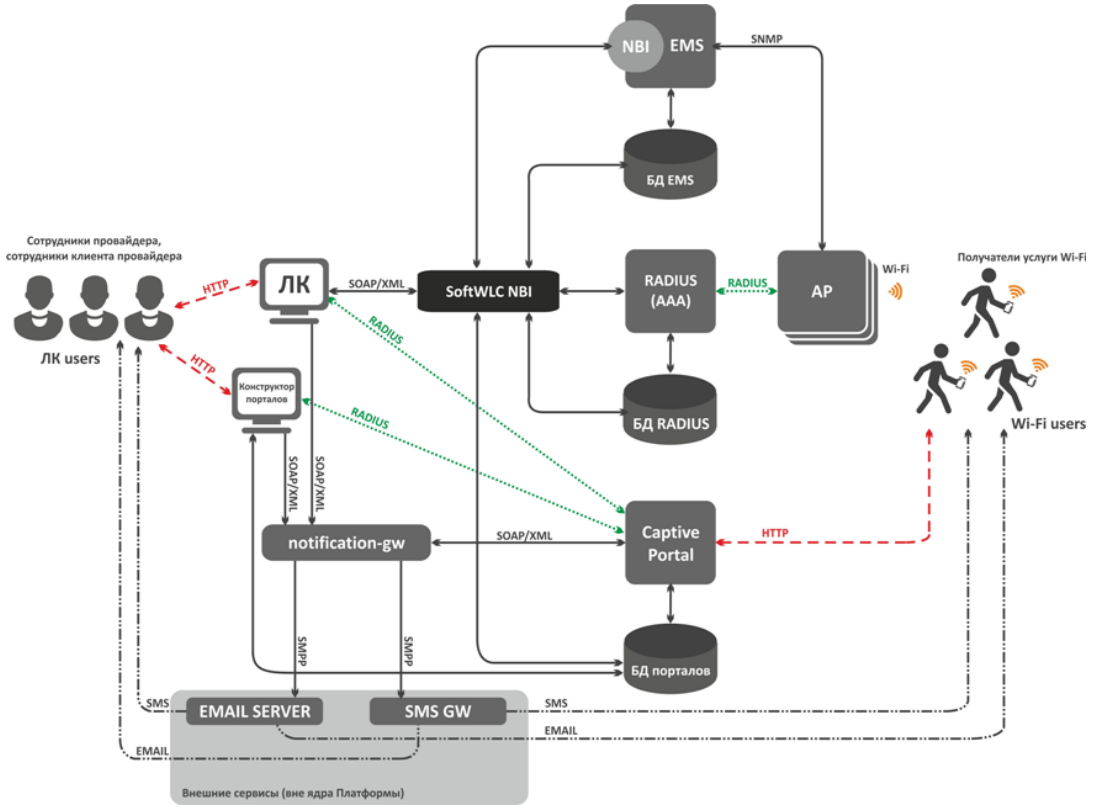

- **EMS-** – SoftWL, , GUI SoftWLC, NBI- OSS .
- **WEB** – , WEB- tomcat6, WEB- hotspot-, . WEB- SMS-, Wi-Fi .
- **B2B** – WEB , Wi-Fi , , SSID.
- **Database** – SoftWLC, Mysql. : .
- **RADIUS-** – , - (Authentication, Authorization, Accounting), freeRADIUS.
- **DHCP-** – IP-c Wi-Fi . isc-dhcp-server. DHCP .
- **APB- –** , . Hotspot .

- **Auth Service -** . RADIUS-. : B2B WEB .
- **Notification Gateway -** , SMS Email. B2B, WEB .
- **PCRF** - SoftWLC ESR-1000 BRAS, ESR-1000 Wi-Fi .

.

: , . SoftWLC . L3-. . Management SoftWLC VLAN . VLAN (SSID VLAN) .

.

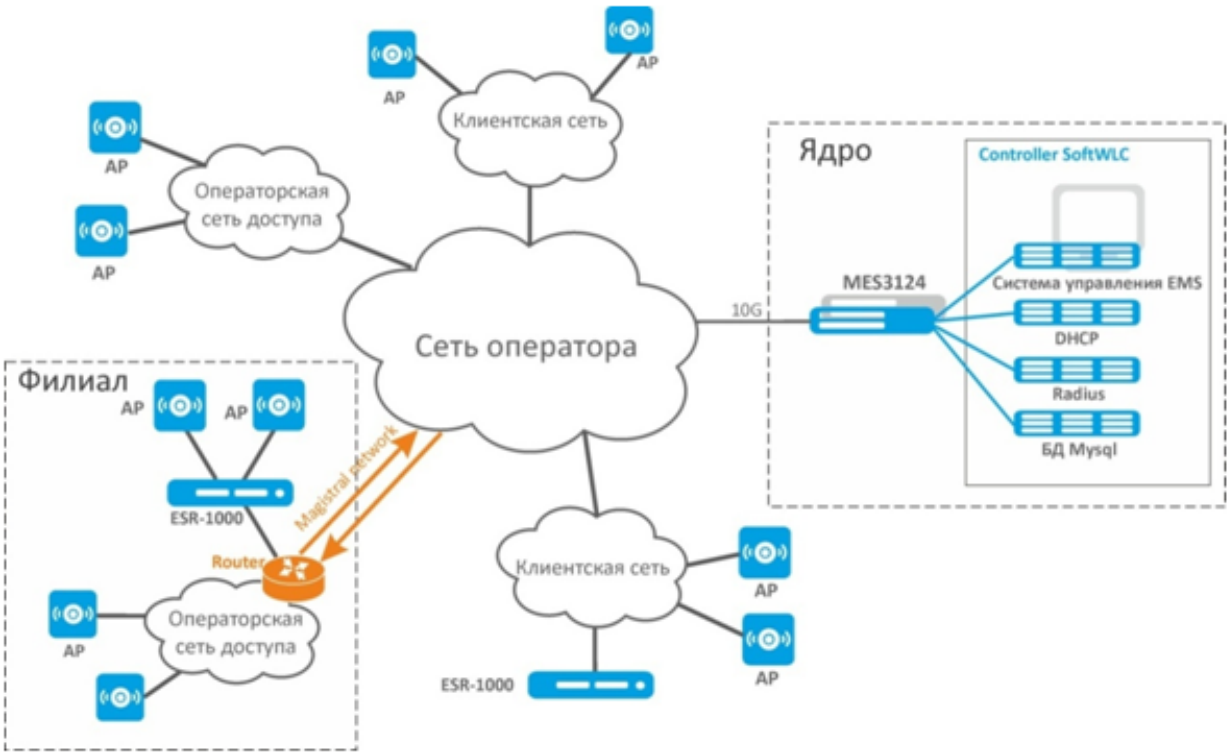

, . SoftWLC . 10 : EMS, WEB APB, – Database, – RADIUS, – DHCP. front-end . , , , , . , , ESR-1000 . , , ESR-1000 .

ESR-1000.

ESR-1000 :

- ;
- (L2 over GRE) ESR-1000 . . , , «access» L2-.
- ESR-1000 firewall.
- NAT ().
- VRF.

, . Soft-GRE ESR-1000 , SoftWLC .

ESR-1000 SoftGRE- L3- . : *Management-* *Data-* .

Management- . L3- , *GRE-*. *Data-* . ESR-1000 (NAT).

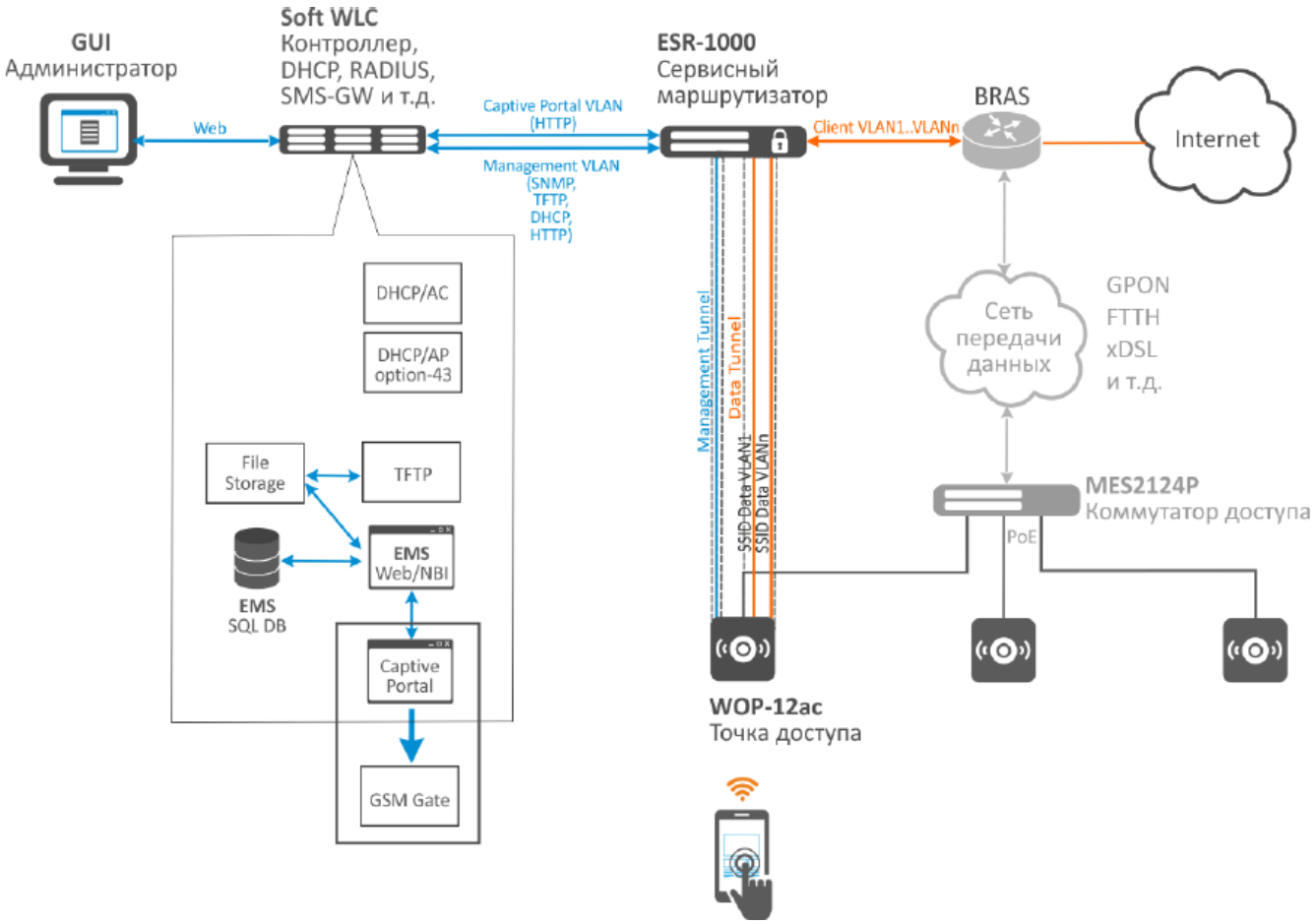

SoftWLC

SoftWLC **Ubuntu Server 18.04 LTS / Ubuntu Server 20.04 LTS / Ubuntu Server 22.04 LTS / Astra Linux Common Edition 2.12.45 / Astra Linux Special Edition 1.7.4 (,)**

Ubuntu Server 18.04 LTS / Ubuntu Server 20.04 LTS / Ubuntu Server 22.04 LTS / Astra Linux Common Edition 2.12.45 / Astra Linux Special Edition 1.7.4 (,)

, (***VM***):

	VM	CPU core, Xeon	RAM, Gb	HDD, Gb
10 200	SoftWLC	4, 64-bit x86 CPUs	8	200
200 500	SoftWLC	4, 64-bit x86 CPUs	16	200
500 1000	SoftWLC	6, 64-bit x86 CPUs	12	200
	DataBase	4, 64-bit x86 CPUs	16	200
1 . 2 .	EMS	6, 64-bit x86 CPUs	14	200
	RADIUS	4, 64-bit x86 CPUs	6	100
	WEB-Portal	4, 64-bit x86 CPUs	8	40
	MySQL	4, 64-bit x86 CPUs	24	500
	MongoDB	4, 64-bit x86 CPUs	10	200